Bamboo® Technical Specification

Paper Holder YB9508

Stock Numbers:

- **YB9508BN – Paper Holder**
  Brushed Nickel Finish

Dimensions:

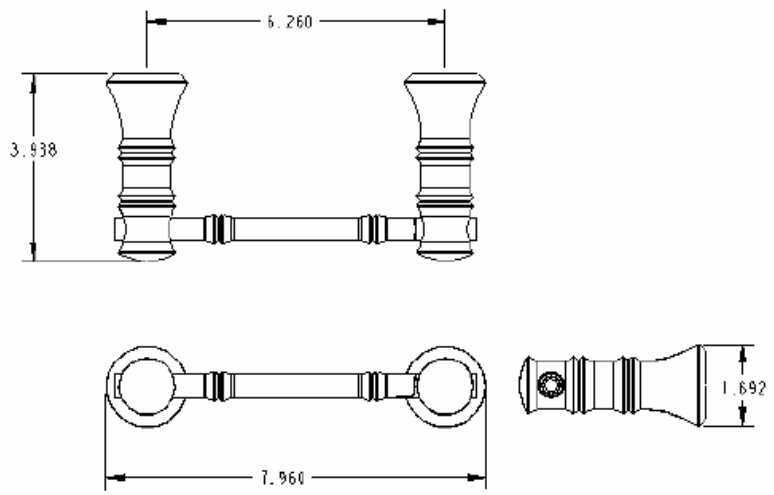

Materials:

Paper Holder is constructed of zinc.

Installation Instructions:

1. Remove the mounting bracket from the body by loosening the setscrew.
2. Position the assembled unit on the wall where desired.
3. Lightly mark the outline of each base.
4. Center a mounting bracket within each base outline with “UP” facing you .
5. Mark the 2 large hole locations of each mounting bracket.
6. Attach each mounting bracket to the wall, using the wall anchors provided
7. Mount each base on the corresponding mounting bracket. Check and make sure that the base set screw hole(s) are facing down. Assemble a set screw to each base. Use the allen wrench included in hardware kit to tighten each set screw and secure the assembly to the mounting bracket(s).

Cleaning Instructions:

To preserve the fine finish of this product, clean only with a soft damp cloth. Dry well. Do not use commercial or abrasive cleaners.

Stock Number:_____Paper Holder
By Creative Specialties

Creative Specialties® International
a Division of MOEN
Buy it for looks. Buy it for life.®

25300 AL MOEN DRIVE • NORTH OLMSTED, OH 44070
CORPORATE HEADQUARTERS: (800) 321-8809 • FAX: (800) 848-6636
INTERNATIONAL: (440) 962-2000 • FAX: (440) 962-2726
CUSTOMER SERVICE (USA): 800-882-0116 • FAX: (888) 379-2720
WWW.MOEN.COM

©Copyright Creative Specialties International

Literature #BA1192

11/01/2012 SPECSHEE 500000134418
Release012