MOEN®

SPECIFICATIONS

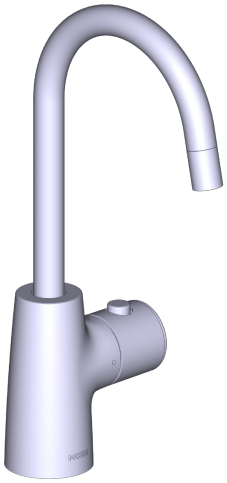

DESCRIPTION
- Metal construction with various finishes identified by suffix
- 3/8" compression cold water inlet connection
- Tube connections to hot water tank
- Open vent faucet Intended to be used with Moen IH2300 Instant Hot Water Tank

OPERATION
- Two step handle operation prevents accidental activation
- Handle button operates with less than 5 lbs. force

FLOW
- Flow is limited to 0.6 gpm (2.3 L/min) at 60 psi

CARTRIDGE
- Ceramic disc cartridge

STANDARDS
- Third part certified to ASME A112.18.1-CSA B125.1 and all applicable requirements referenced therein including NSF61/9 & 372 and ASSE 1023

WARRANTY
- 3 year limited warranty

Visit www.moen.com/support for complete details and limitations

SIP™

Transitional Instant Hot Faucet

MODELS: IH7620 Series

NOTE:THIS FAUCET IS DESIGNED TO BE INSTALLED THROUGH 1 HOLE, 1-1/4" (32mm) MIN. DIA.
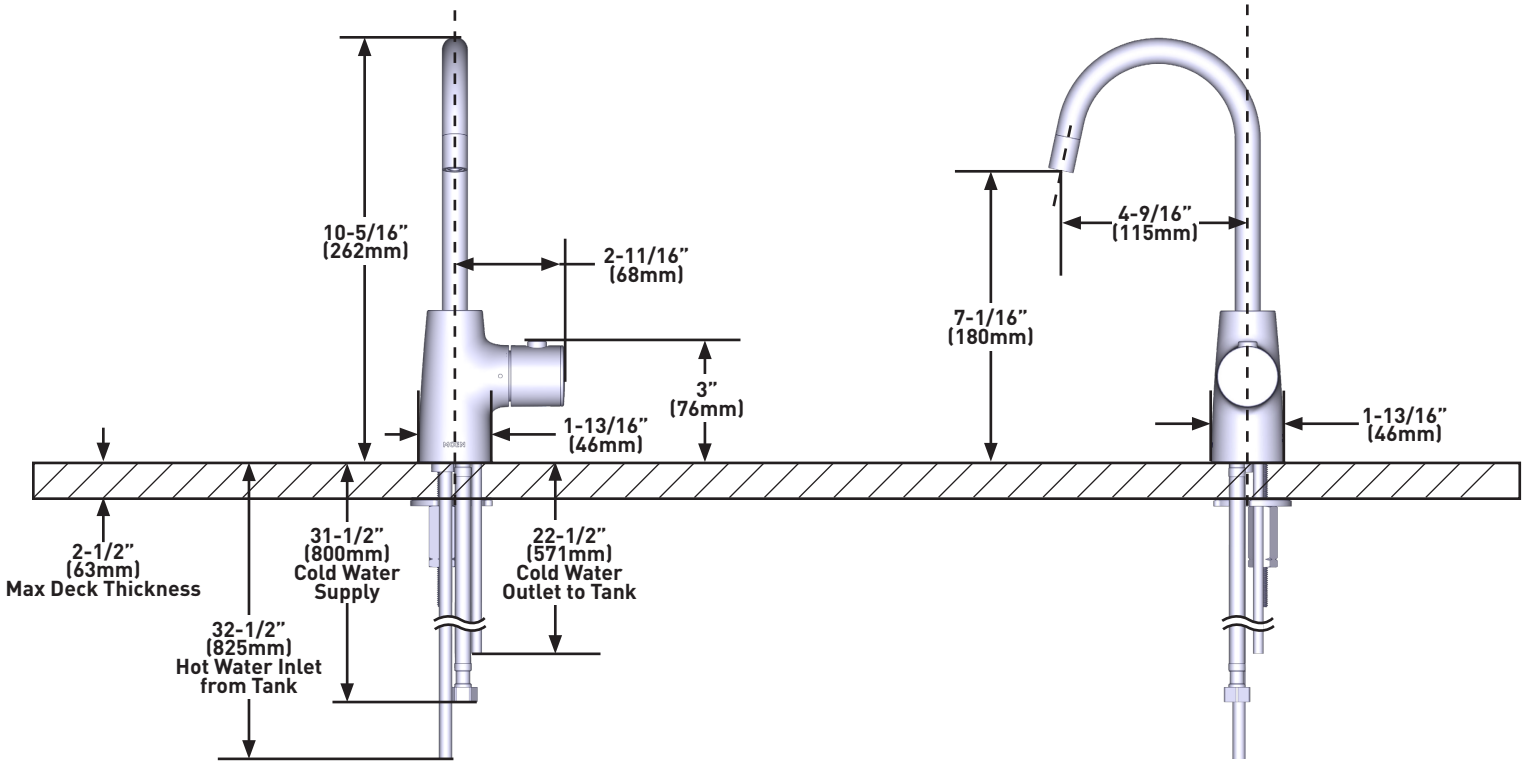
GREEN UPC®