Colinet™ Technical Specification

Towel Bar YB0518 / YB0524

Stock Numbers:

- **18" Towel Bar**
  YB0518 Sereis
- **24" Towel Bar**
  YB0524 Sereis

Dimensions:

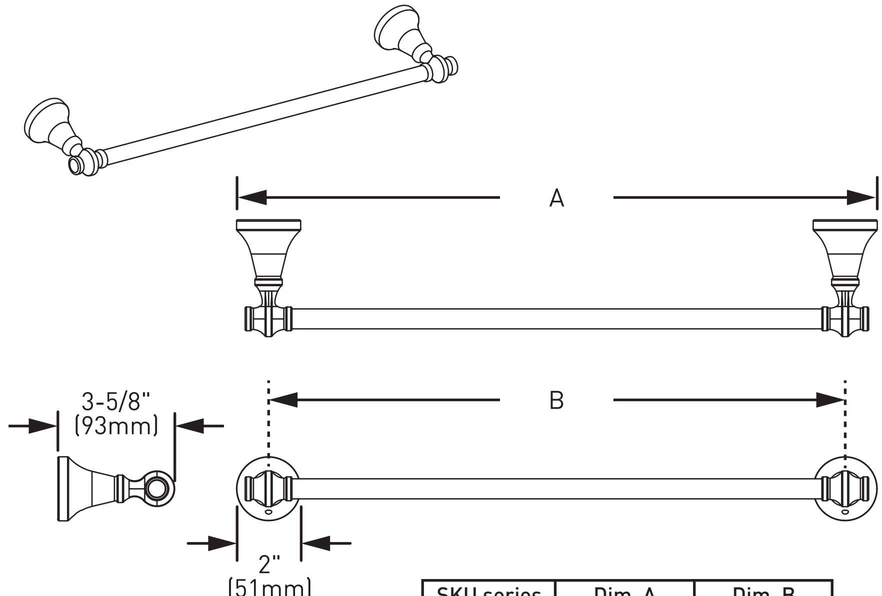

SKU series	Dim. A	Dim. B
YB0518	20"(510mm)	18"(457mm)
YB0524	26"(662mm)	24"(610mm)

Materials:

Towel Bar posts are constructed of zinc. **Bar** is stainless steel.

Installation Instructions:

Please refer to product instructions for installation steps.

Cleaning Instructions:

To preserve the fine finish of this product, clean only with a soft damp cloth.
Use a dry cloth to wipe down the product and remove any excess moisture.
Do not use commercial or abrasive cleaners.

MOEN®

1-800-BUY-MOEN
www.moen.com

05/25/2026 SPC16221 500000721515
Released 01