MOEN®

The Lite™ Series

SPECIFICATIONS

Description

The Lite™ Series is designed for homeowners who do just a little cooking and want clean-up to be as quick and easy as possible. Built with a compact design and a powerful, high-speed motor, the Lite Series GT33C disposes of light food scraps like fruit skins, cereal, and other soft foods. Plus, the 360° Clean Rinse rinses waste more thoroughly to eliminate odors for a fresher kitchen. The disposal features the FAST TRACK™ installation system for fast and easy connection. The disposal installs easily on most existing 3-bolt assemblies and is backed by a 5-year limited warranty with in-home service.

Product Features

- Easy-lift installation system allows for simple, quick connection and enhanced comfort when under the sink by allowing one hand to mount the hardware while the other provides support for the disposal.
- Includes the Moen FAST TRACK™ system for quicker installation.
- Fits most existing assemblies, including the InSinkErator® brand.
- 1/3 horsepower VORTEX™ motor provides fast, powerful grinding of everyday food scraps and helps reduce jamming.
- Continuous feed technology with stainless steel and galvanized components.
- Exclusive 360° Clean Rinse eliminates odors by rinsing away food scraps more effectively.
- Comes with a pre-installed removable power cord that is easy to remove for optional hardwiring. A savings over models where cordmust be purchased separately.
- Sloped dishwasher inlet allows for more efficient drainage.
- Unjamming wrench included.

Warranty & Assurance

- 5 year limited warranty with in-home service
- Safe for use with properly sized septic systems
- Disposals reduce waste sent to landfills, making them a more sustainable option for your home.

Model: GT33C

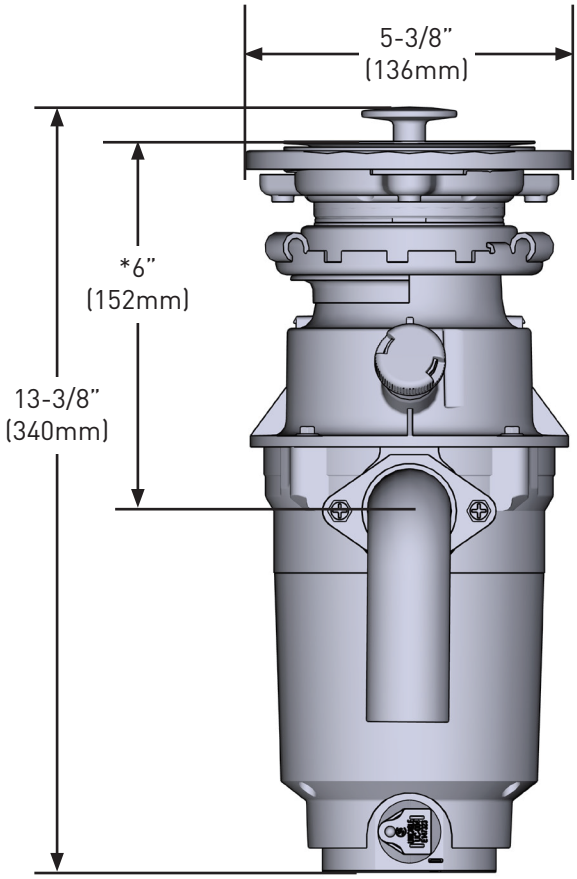

***NOTE: Distance from bottom of the sink to center line of disposal discharge. Add 1/2" (13mm) when a stainless steel sink is used.**

Specification Detail	
Horsepower	1/3 HP
Feed Type	Continuous
On/Off Controls	Wall Switch
Motor Type	Permanent Magnet Motor
RPM (Revolutions per minute)	1900
Weight	7.75 lbs. / 3.5 kg
Volts	115
Hz/Amps	60 / 4.5
Drain Connection Size	1-1/2", 38mm
Dishwasher Connection Size	7/8", 22mm
Maximum Sink Thickness	1/2", 13mm
Sink Drain Flange Finish	Brushed Stainless Steel
Grind Ring Material	Galvanized Steel
Turntable Assembly (Includes impellers)	Stainless Steel
Grind Chamber Material	Corrosion Proof Glass Filled Polypropylene