Lindor™ Technical Specification

Towel Ring MY8786

Stock Numbers:

- ☐ **MY8786CH – Towel Ring**
  Chrome
- ☐ **MY8786BN – Towel Ring**
  Brushed Nickel
- ☐ **MY8786BL – Towel Ring**
  Matte Black
- ☐ **MY8786BG– Towel Ring**
  Brushed Gold

Dimensions:

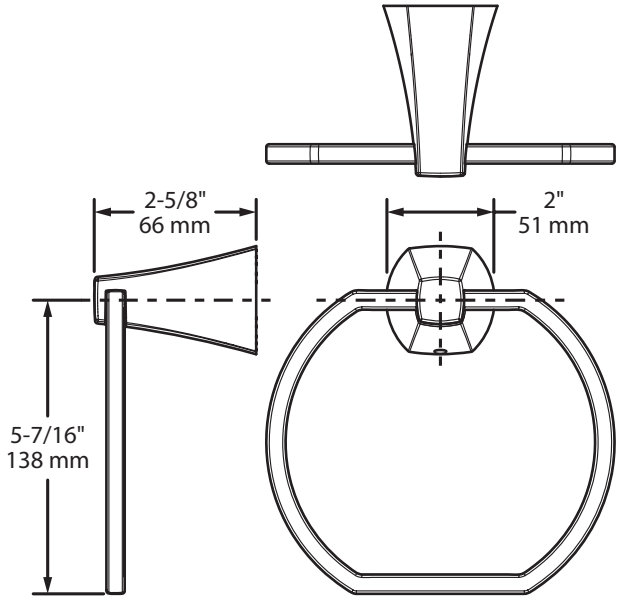

Materials:

Towel Ring Post is constructed of zinc.
Ring is aluminum.

Installation Instructions:

• Please refer to production instruction sheets for installation steps.

Cleaning Instructions:

To preserve the fine finish of this product, clean only with a soft damp cloth. Dry well. Do not use commercial or abrasive cleaners.

Stock Number:_____ Towel Ring
By Moen Incorporated

MOEN®

25300 AL MOEN DRIVE • NORTH OLMSTED, OH 44070
CORPORATE HEADQUARTERS: (800) 321-8809 • FAX: (800) 848-6636
INTERNATIONAL: (440) 962-2000 • FAX: (440) 962-2726
CUSTOMER SERVICE (USA): 800-882-0116 • FAX: (888) 379-2720
WWW.MOEN.COM
© 2024 Moen Incorporated. Moen is a registered trademark and Lindor is a trademark of Moen Incorporated. All rights reserved.

05/06/2024 SPC13447 S000061904
Rev.Date:04/11