MOEN®

Specifications

Model Number	Color	Depth-Inches
GGB3029B	Black	10"
GGW3029B	White	10"
GGR3029B	Gray	10"
GGM3029B	Mocha	10"

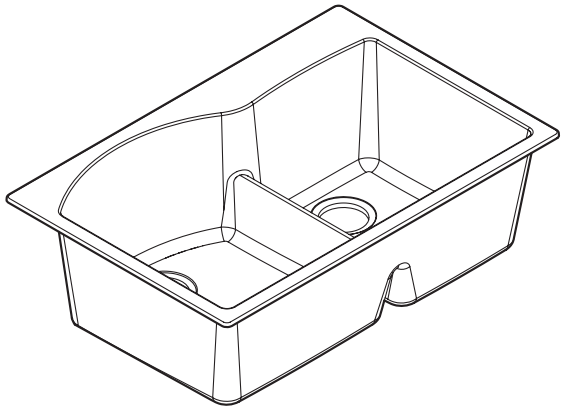

SINK DESCRIPTION
- Granite Series Double Bowl Sink
- Dual Mount
- (4) Pre-Scored Holes

WARRANTY
- Lifetime limited warranty to the original homeowner
- 10 year limited warranty when used in a Multi-family installation
- 5 year limited warranty when used in a Commercial installation
- Visit www.moen.com/customer-support/warranty for complete details and limitations

SINK DIMENSIONS
- Overall : 33″ x 22″ x 10″
- Bowl 1 : 17-3/16″ x 19-5/16″ x 10″
- Bowl 2 : 13-1/8″ x 16-5/8″ x 10″
- Drain Size: 3-1/2″
- Faucet Holes
  - 1-1/2″ (38mm) diameter
  - 4″ (102mm) center

CUT OUT DIMENSIONS
- 32-3/8″ x 21-3/8" with 3/16" corner radius, tolerance of plus or minus 1-3/4" is acceptable

CRITICAL DIMENSIONS
(DO NOT SCALE)

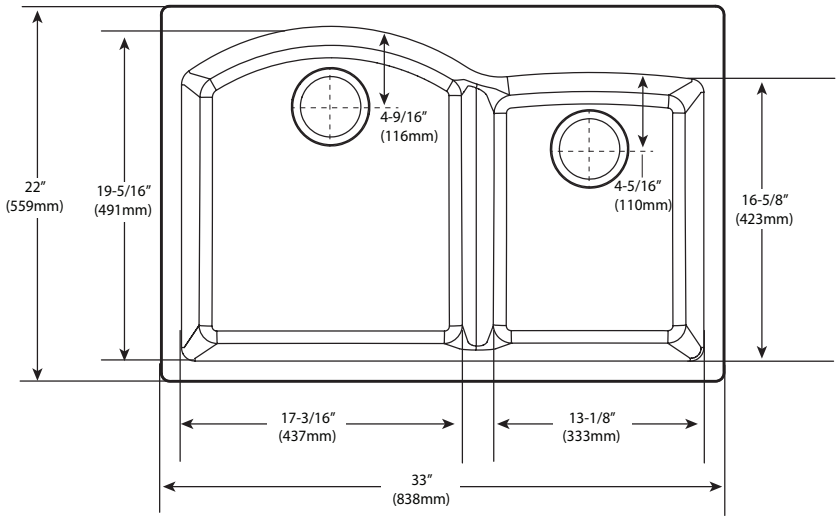

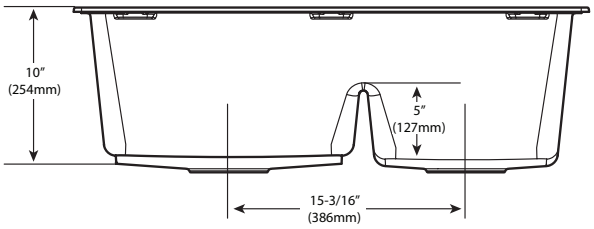

MADE IN GERMANY

Rev. 10/19

FOR MORE INFORMATION CALL: 1-800-BUY-MOEN
www.moen.com

10/24/2019 SPC13495 500003796S
Released 01