MOEN

Buy it for looks. Buy it for life.®

Specifications

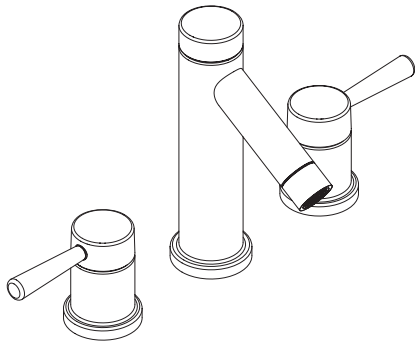

LEVEL™
Two-Handle Widespread Lavatory Faucet

Models: CAT6110 series

Valve: CA9000, CA69000

NOTE: THIS FAUCET IS DESIGNED TO BE INSTALLED THRU 3 HOLES, 1-1/8" MIN. DIA.

DESCRIPTION
- Hydrolock™ quick connect system
- Metal construction with various finishes identified by suffix
- 1/2" IPS connections

OPERATION
- Lever style handles
- Maximum handle rotation angle is 90˚ to full on for either handle
- Hot side counterclockwise to open (clockwise to close)
- Cold side clockwise to open (counterclockwise to close)
- Includes hot and cold temperature indicators

FLOW
- Flow is limited to 1.5 gpm max (5.7L/min) at 60 psi, for products made before October 2008 flow is limited to 2.2 gpm max (8.3 L/min)

CARTRIDGE
- 1224 cartridge design
- Nonmetallic, nonferrous and stainless steel material

STANDARDS
- Third party certified to WaterSense® CSA B-125.1, ASME A112.18.1 and all applicable requirements referenced therein including NSF 61/9
- Contains no more than 0.25% weighted average lead content
- Complies with California Proposition 65 and with the Federal Safe Water Drinking Act
- **ADA** for lever handle

WARRANTY
- Lifetime limited warranty against leaks, drips and finish defects to the original consumer purchaser
- 5 year warranty if used in commercial installations

WaterSense Meets EPA Criteria
Certified by IAPMO R&T

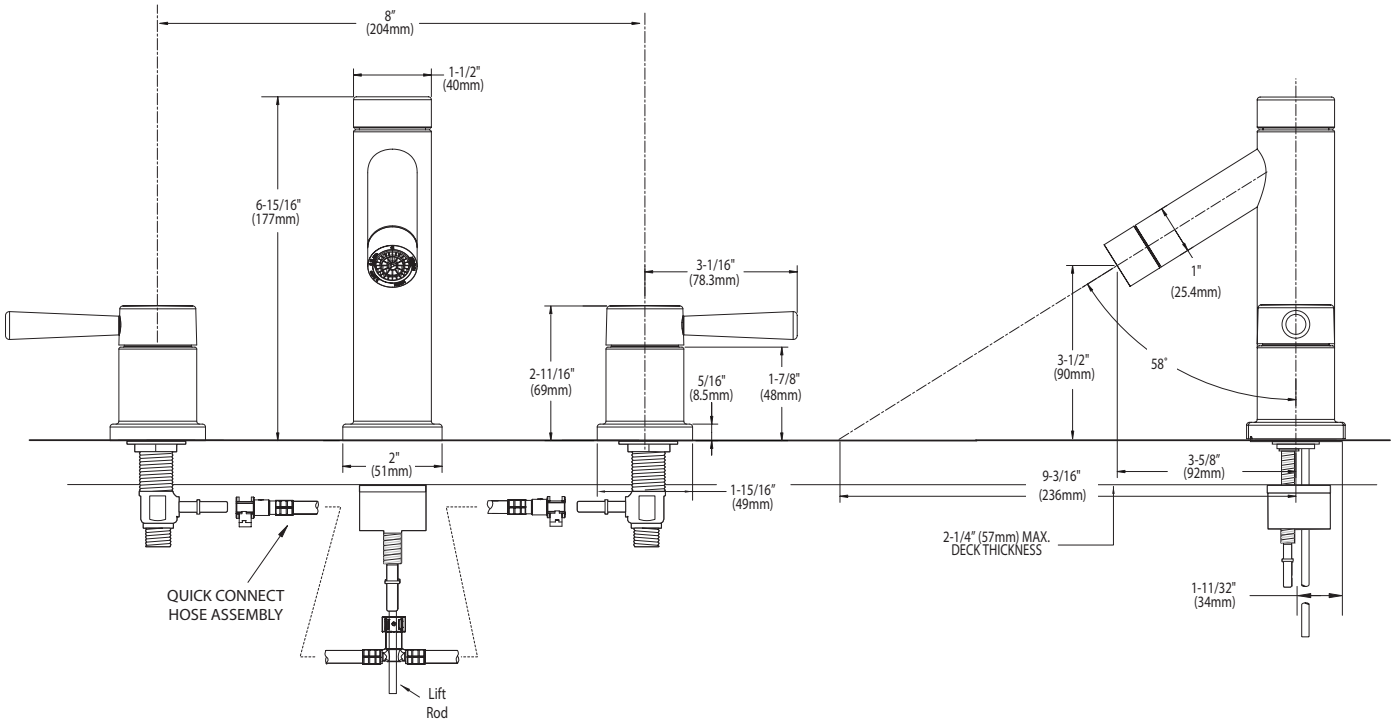

CRITICAL DIMENSIONS

(DO NOT SCALE)

Rev. 7/09

FOR MORE INFORMATION CALL: 1-800-BUY-MOEN
www.moen.com