MOEN®
COMMERCIAL

Specifications

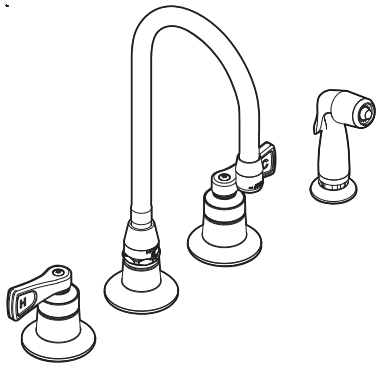

Two-Handle Kitchen Faucet w/Side Spray

Model: CA8242

BUY AMERICAN ACT COMPLIANT

NOTE: Designed to be installed through 4 holes - 1" min. dia.

DESCRIPTION
- Brass construction with chrome plated finish
- 1/2" IPS connections
- Includes side spray w Hydrolock® quick-connect system

OPERATION
- Lever style handles with hot and cold color indicators
- Vandal resistant torx head screws
- 1/4 turn to open (clockwise to close)

FLOW
- Aerator is limited to 2.2GPM Max (8.34 Min.)

CARTRIDGE
- Brass shell, ceramic disc cartridge
- Nonmetallic/nonferrouse and ceramic material

STANDARDS
- Third party certified to ASME A112.18.1M/CSA B-125 and all applicable requirements referenced therein including NSF 61/9
- Contains no more than 0.25% weighted average lead content
- Complies with California Proposition 65 and with the Federal Safe Water Drinking Act
- **ADA** for lever handles

WARRANTY
- Warranted for 5 years against material or manufacturing defects

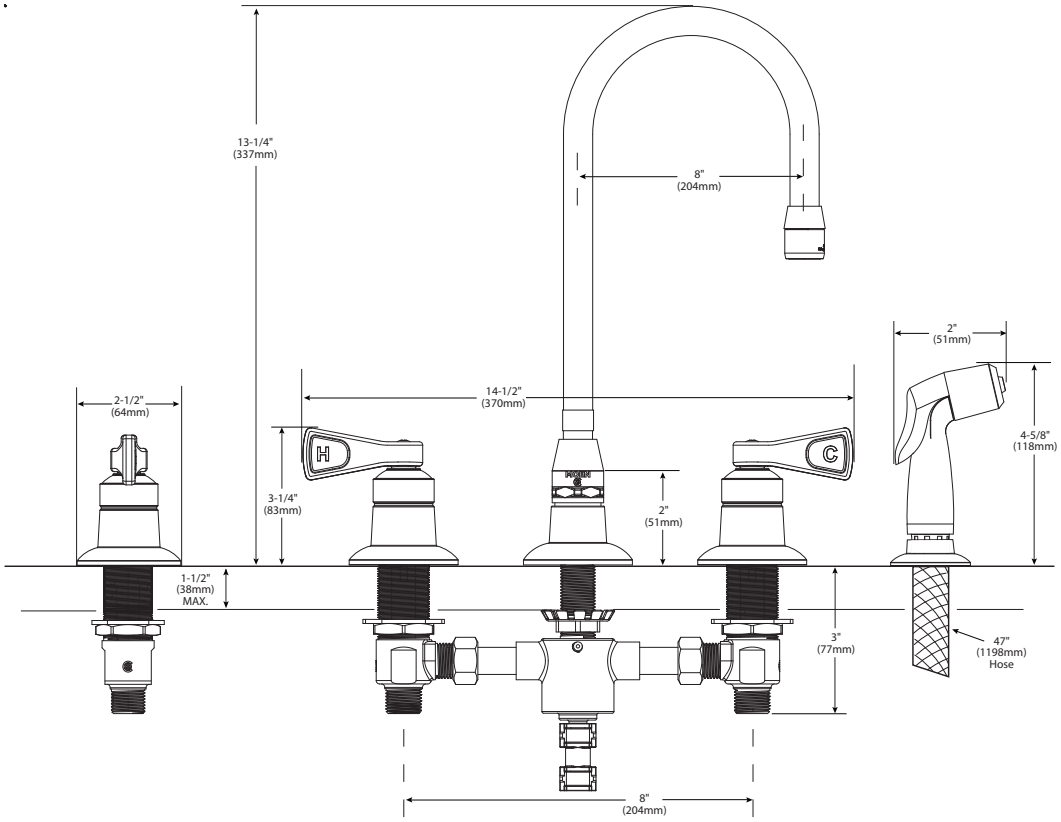

CRITICAL DIMENSIONS

(DO NOT SCALE)