Metry™ Technical Specification

Hotel Shelf 24" BH5094

Stock Numbers:

- ☐ **BH5094PCH – Hotel Shelf**
  Chrome Finish

Dimensions:

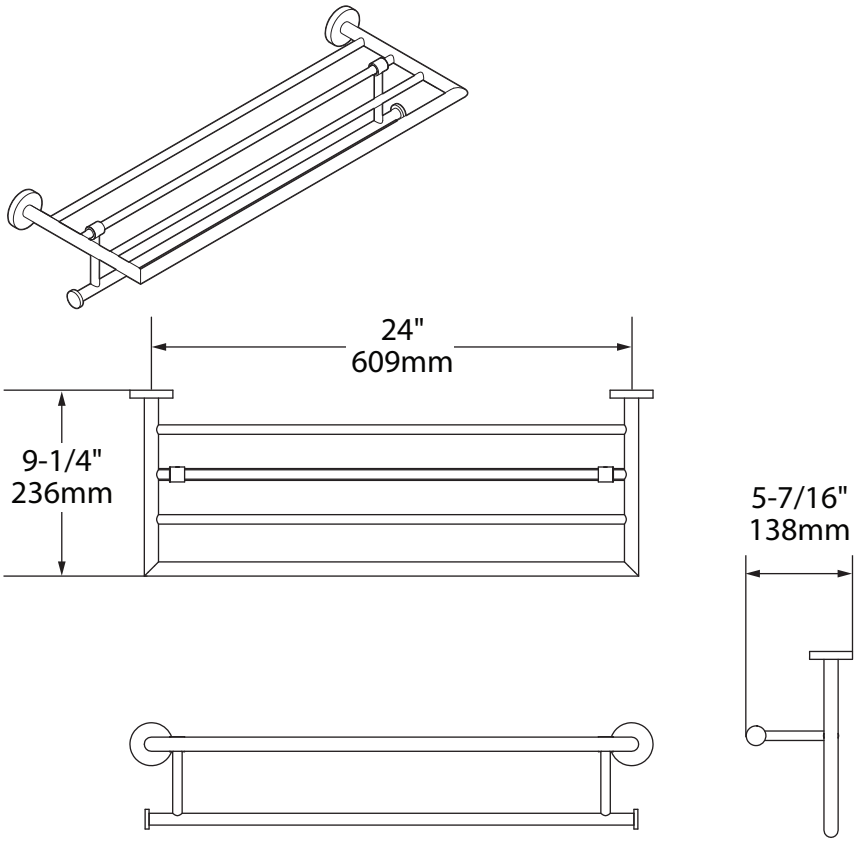

Materials:

Hotel Shelf is constructed of stainless steel.

Installation Instructions:

1. Remove the mounting post from the body by loosening the set screw.
2. Position the mounting template on the wall in the desired location. Using a level, align the template and tape it to the wall.
3. Drill pilot holes in marked location, remove template from wall
4. Attach mounting plates to wall using anchors in predrilled pilot holes
5. Tighten all screws.
6. Place each post over the mounting plate with set screw down. Tighten both set screws.

Installation Instructions:

To preserve the fine finish of this product, clean only with a soft damp cloth. Dry well. Do not use commercial or abrasive cleaners.

Stock Number: _____ **Hotel Shelf**
By MOEN

MOEN®

25300 AL MOEN DRIVE • NORTH OLMSTED, OH 44070
CORPORATE HEADQUARTERS: (800) 321-8809 • FAX: (800) 848-6636
INTERNATIONAL: (440) 962-2000 • FAX: (440) 962-2726
CUSTOMER SERVICE (USA): (800) 882-0116 • FAX: (888) 379-2720
WWW.MOEN.COM ©Copyright Moen, Inc.

06/12/2019 SPC5380 S000091616
Released 01