MOEN®

Specifications

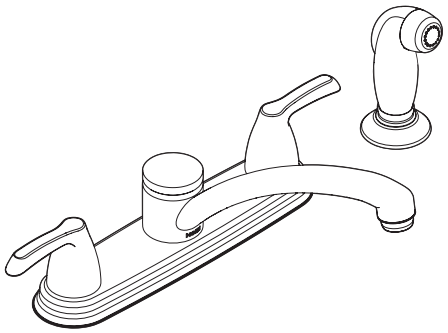

Adler™
Two-Handle Lever Style Kitchen Faucet with Protégé Side Spray

Models: 87046 series

NOTE: THIS FAUCET IS DESIGNED TO BE INSTALLED THROUGH 3 OR 4 HOLES, 1" (25MM) MIN. DIA.

DESCRIPTION
- Metal construction with various finishes identified by suffix
- 1/2" IPS connections
- Includes sidespray with Durlock™ quick connect installation
- Sidespray plug included for optional sidespray

OPERATION
- Levers included
- Hot side counterclockwise to open (clockwise to close)
- Cold side clockwise to open (counterclockwise to close)

FLOW
- Aerator is limited to 1.5 gpm max. (5.7 L/min)

CARTRIDGE
- 1224 cartridge design
- Non-metallic and stainless materials

STANDARDS
- Third party certified to ASME A112.18.1/CSA B-125.1 and all applicable requirements referenced therein including NSF 61/9 & 372
- Meets Georgia SB370 requirements
- Complies with California Proposition 65 and with the Federal Safe Drinking Water Act
- ADA for lever handles

WARRANTY
- Lifetime limited warranty against leaks, drips and finish defects to the original homeowner
- 10 year limited warranty when used in a multifamily installation
- 5 year limited warranty when used in a commercial installation

Visit www.moen.com/support for complete details and limitations

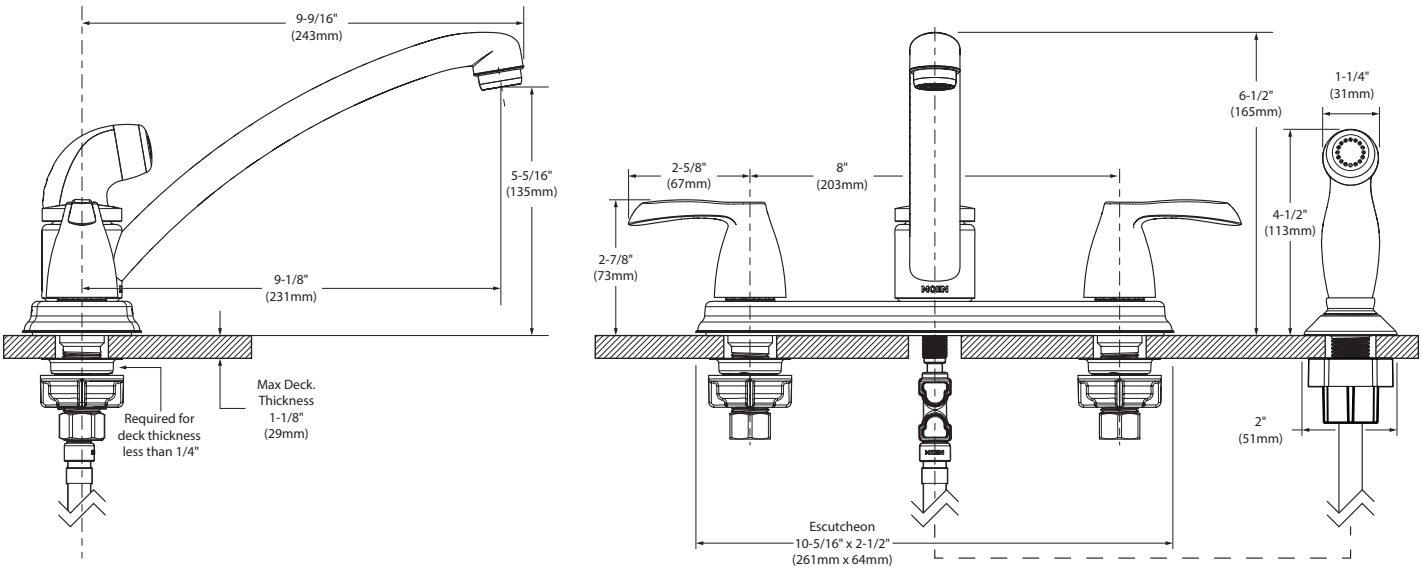

CRITICAL DIMENSIONS

(DO NOT SCALE)