MOEN®

Specifications

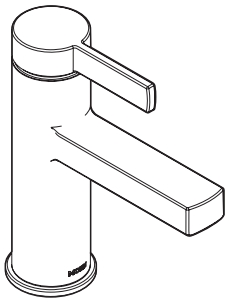

DESCRIPTION
- Metal construction with various finishes identified by suffix
- Flexible supply lines with 3/8" compression fittings
- Includes plastic push-up drain assembly

OPERATION
- Lever style handle
- Temperature controlled by 100° arc of handle travel

FLOW
- Water usage is limited to these maximum flow rates as indicated by the corresponding product markings
  1.0 gpm max (3.8L/min) at 60 psi

CARTRIDGE
- 1255™ Duralast™ cartridge
- Nonmetallic/nonferrous and ceramic material

STANDARDS
- Third party certified to WaterSense,® ASME A112.18.1/CSA B125.1, and all applicable requirements referenced therein
- Certified to NSF 61/9 & 372
- Compliant with California water efficiency regulations
- Complies with California Proposition 65 and with the Federal Safe Drinking Water Act
- ADA for lever handle

WARRANTY
- Lifetime limited warranty against leaks, drips and finish defects to the original homeowner
- 10 year limited warranty when used in a multifamily installation
- 5 year limited warranty when used in a commercial installation

Visit www.moen.com/support for complete details and limitations

Bodhi™
Single-Handle Lavatory Faucet

Model: 4133 Series

NOTE: THIS FAUCET IS DESIGNED TO BE INSTALLED THROUGH 1 OR 3 HOLE, 1-1/4" MIN. DIA.

WaterSense Meets EPA Criteria
Certified by IAPMO R&T

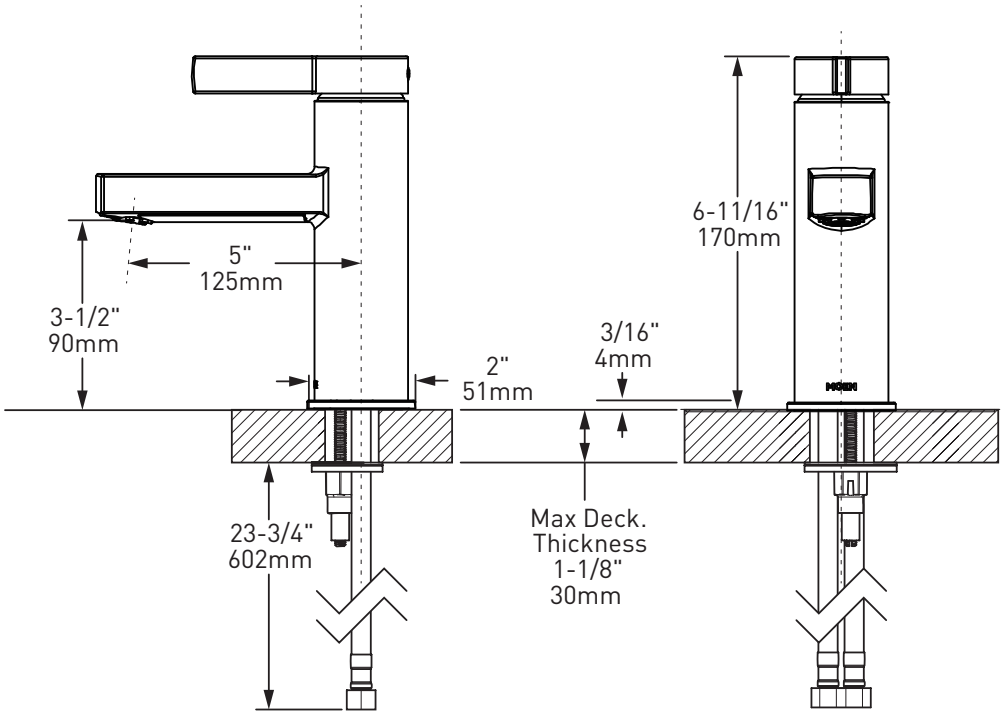

FOR MORE INFORMATION CALL: 1-800-BUY-MOEN
www.moen.com

06/12/2025 SPC2044 500000646565
Released 01