MOEN
Buy it for looks. Buy it for life.®

MT417

LAVATORY POP-UP WASTE ASSEMBLY

WITH 4 INCH TAILPIECE

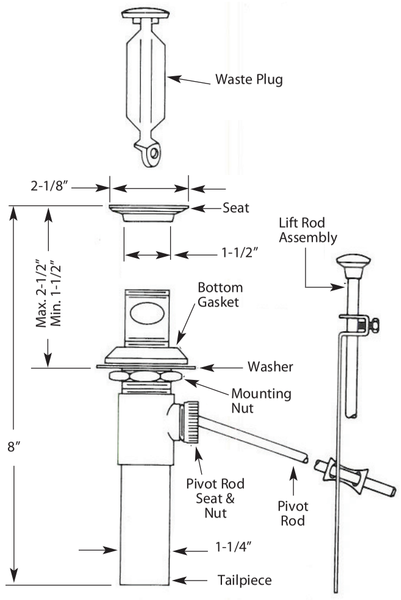

WASTE No. 10790 - Chrome Finish
WASTE No. 11760 - Antique Brass
WASTE No. 15950 - Satin Brass
WASTE No. 15955 - Polished Brass

PARTS LIST

12694	Lift Rod Assembly, Chrome Finish	1185	Seat
		11248	Bottom Gasket
15952	Lift Rod Assembly, Satin Brass	1217	Washer
		1219	Mounting Nut
15958	Lift Rod Assembly, Polished Brass	12689	Pivot Rod & Clip Assy.
		14103	Pivot Rod Seat
15957	Lift Rod Assembly, Antique Brass	14104	Pivot Rod Nut
		1189	Tailpiece
13439	Waste Plug (All Metal), Chrome Finish		
12328	Waste Plug (All Metal), Satin Brass		
12327	Waste Plug (All Metal), Antique Brass		
12323	Waste Plug (All Metal), Polished Brass		
10709	Waste Plug (Plastic w/Metal Cap), Chrome		
12736	Waste Plug (Plastic w/Metal Cap), Satin Brass		
12737	Waste Plug (Plastic w/Metal Cap), Antique Brass		
12738	Waste Plug (Plastic w/Metal Cap), Polished Brass		
93837	Waste Plug & Seat (All Metal), Antique Brass		
93832	Waste Plug & Seat (All Metal), Satin Brass		
93838	Waste Plug & Seat (All Metal), Polished Brass		
93457	Waste Plug & Seat (Plastic Plug w/Metal Cap), Antique Brass		
93452	Waste Plug & Seat (Plastic Plug w/Metal Cap), Satin Brass		
93458	Waste Plug & Seat (Plastic Plug w/Metal Cap), Polished Brass		

LAVATORY WASTE INSTALLATION INSTRUCTIONS

1

Turn off water supply prior to installation.

1. Throughly clean around drain opening in lavatory.
2. Remove plug and seat from drain and place drain up through opening. Apply 1/4 inch bead of sealant around bottom of seat.
3. Screw seat on the top of the body.
4. With pivot rod facing rear of sink, tighten mountin nut until waste is snug and screw tailpiece into bottom of the body. Wipe excess sealant from the seat area in the bowl. Drop in waste plug and installation is complete. Hook up drain rod as shown. Make sure knob clears the faucet.
5. Waste plug can be made "vandalproof" by inserting the inside end of the side rod through the eye in the bottom of the plug.
6. You are now ready to turn on water supply.

2

3

4

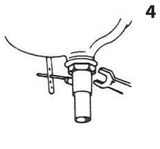

POSITION FOR EASY REMOVAL

5

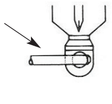

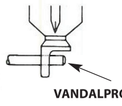

VANDALPROOF

© Copyright, 2011
Moen Incorporated

MT417

MOEN
Buy it for looks. Buy it for life.®

MT417

LAVATORY POP-UP WASTE ASSEMBLY

WITH 4 INCH TAILPIECE

WASTE No. 10790 - Chrome Finish
WASTE No. 11760 - Antique Brass
WASTE No. 15950 - Satin Brass
WASTE No. 15955 - Polished Brass

PARTS LIST

12694	Lift Rod Assembly, Chrome Finish	1185	Seat
		11248	Bottom Gasket
15952	Lift Rod Assembly, Satin Brass	1217	Washer
		1219	Mounting Nut
15958	Lift Rod Assembly, Polished Brass	12689	Pivot Rod & Clip Assy.
		14103	Pivot Rod Seat
15957	Lift Rod Assembly, Antique Brass	14104	Pivot Rod Nut
		1189	Tailpiece
13439	Waste Plug (All Metal), Chrome Finish		
12328	Waste Plug (All Metal), Satin Brass		
12327	Waste Plug (All Metal), Antique Brass		
12323	Waste Plug (All Metal), Polished Brass		
10709	Waste Plug (Plastic w/Metal Cap), Chrome		
12736	Waste Plug (Plastic w/Metal Cap), Satin Brass		
12737	Waste Plug (Plastic w/Metal Cap), Antique Brass		
12738	Waste Plug (Plastic w/Metal Cap), Polished Brass		
93837	Waste Plug & Seat (All Metal), Antique Brass		
93832	Waste Plug & Seat (All Metal), Satin Brass		
93838	Waste Plug & Seat (All Metal), Polished Brass		
93457	Waste Plug & Seat (Plastic Plug w/Metal Cap), Antique Brass		
93452	Waste Plug & Seat (Plastic Plug w/Metal Cap), Satin Brass		
93458	Waste Plug & Seat (Plastic Plug w/Metal Cap), Polished Brass		

LAVATORY WASTE INSTALLATION INSTRUCTIONS

Turn off water supply prior to installation.
1. Throughly clean around drain opening in lavatory.
2. Remove plug and seat from drain and place drain up through opening. Apply 1/4 inch bead of sealant around bottom of seat.
3. Screw seat on the top of the body.
4. With pivot rod facing rear of sink, tighten mountin nut until waste is snug and screw tailpiece into bottom of the body. Wipe excess sealant from the seat area in the bowl. Drop in waste plug and installation is complete. Hook up drain rod as shown. Make sure knob clears the faucet.
5. Waste plug can be made "vandalproof" by inserting the inside end of the side rod through the eye in the bottom of the plug.
6. You are now ready to turn on water supply.

POSITION FOR EASY REMOVAL

VANDALPROOF

MT417 OCTOBER 11

© Copyright, 2011
Moen Incorporated

MT417

MOEN
Buy it for looks. Buy it for life.®

MT417

LAVATORY POP-UP WASTE ASSEMBLY

WITH 4 INCH TAILPIECE

WASTE No. 10790 - Chrome Finish
WASTE No. 11760 - Antique Brass
WASTE No. 15950 - Satin Brass
WASTE No. 15955 - Polished Brass

PARTS LIST

12694	Lift Rod Assembly, Chrome Finish	1185	Seat
		11248	Bottom Gasket
15952	Lift Rod Assembly, Satin Brass	1217	Washer
		1219	Mounting Nut
15958	Lift Rod Assembly, Polished Brass	12689	Pivot Rod & Clip Assy.
		14103	Pivot Rod Seat
15957	Lift Rod Assembly, Antique Brass	14104	Pivot Rod Nut
		1189	Tailpiece
13439	Waste Plug (All Metal), Chrome Finish		
12328	Waste Plug (All Metal), Satin Brass		
12327	Waste Plug (All Metal), Antique Brass		
12323	Waste Plug (All Metal), Polished Brass		
10709	Waste Plug (Plastic w/Metal Cap), Chrome		
12736	Waste Plug (Plastic w/Metal Cap), Satin Brass		
12737	Waste Plug (Plastic w/Metal Cap), Antique Brass		
12738	Waste Plug (Plastic w/Metal Cap), Polished Brass		
93837	Waste Plug & Seat (All Metal), Antique Brass		
93832	Waste Plug & Seat (All Metal), Satin Brass		
93838	Waste Plug & Seat (All Metal), Polished Brass		
93457	Waste Plug & Seat (Plastic Plug w/Metal Cap), Antique Brass		
93452	Waste Plug & Seat (Plastic Plug w/Metal Cap), Satin Brass		
93458	Waste Plug & Seat (Plastic Plug w/Metal Cap), Polished Brass		

LAVATORY WASTE INSTALLATION INSTRUCTIONS

Turn off water supply prior to installation.
1. Throughly clean around drain opening in lavatory.
2. Remove plug and seat from drain and place drain up through opening. Apply 1/4 inch bead of sealant around bottom of seat.
3. Screw seat on the top of the body.
4. With pivot rod facing rear of sink, tighten mountin nut until waste is snug and screw tailpiece into bottom of the body. Wipe excess sealant from the seat area in the bowl. Drop in waste plug and installation is complete. Hook up drain rod as shown. Make sure knob clears the faucet.
5. Waste plug can be made "vandalproof" by inserting the inside end of the side rod through the eye in the bottom of the plug.
6. You are now ready to turn on water supply.

POSITION FOR EASY REMOVAL

VANDALPROOF

MT417 OCTOBER 11

© Copyright, 2011
Moen Incorporated

MT417

MOEN
Buy it for looks. Buy it for life.®

MT417

LAVATORY POP-UP WASTE ASSEMBLY

WITH 4 INCH TAILPIECE

WASTE No. 10790 - Chrome Finish
WASTE No. 11760 - Antique Brass
WASTE No. 15950 - Satin Brass
WASTE No. 15955 - Polished Brass

PARTS LIST

12694	Lift Rod Assembly, Chrome Finish	1185	Seat
		11248	Bottom Gasket
15952	Lift Rod Assembly, Satin Brass	1217	Washer
		1219	Mounting Nut
15958	Lift Rod Assembly, Polished Brass	12689	Pivot Rod & Clip Assy.
		14103	Pivot Rod Seat
15957	Lift Rod Assembly, Antique Brass	14104	Pivot Rod Nut
		1189	Tailpiece
13439	Waste Plug (All Metal), Chrome Finish		
12328	Waste Plug (All Metal), Satin Brass		
12327	Waste Plug (All Metal), Antique Brass		
12323	Waste Plug (All Metal), Polished Brass		
10709	Waste Plug (Plastic w/Metal Cap), Chrome		
12736	Waste Plug (Plastic w/Metal Cap), Satin Brass		
12737	Waste Plug (Plastic w/Metal Cap), Antique Brass		
12738	Waste Plug (Plastic w/Metal Cap), Polished Brass		
93837	Waste Plug & Seat (All Metal), Antique Brass		
93832	Waste Plug & Seat (All Metal), Satin Brass		
93838	Waste Plug & Seat (All Metal), Polished Brass		
93457	Waste Plug & Seat (Plastic Plug w/Metal Cap), Antique Brass		
93452	Waste Plug & Seat (Plastic Plug w/Metal Cap), Satin Brass		
93458	Waste Plug & Seat (Plastic Plug w/Metal Cap), Polished Brass		

LAVATORY WASTE INSTALLATION INSTRUCTIONS

Turn off water supply prior to installation.
1. Throughly clean around drain opening in lavatory.
2. Remove plug and seat from drain and place drain up through opening. Apply 1/4 inch bead of sealant around bottom of seat.
3. Screw seat on the top of the body.
4. With pivot rod facing rear of sink, tighten mountin nut until waste is snug and screw tailpiece into bottom of the body. Wipe excess sealant from the seat area in the bowl. Drop in waste plug and installation is complete. Hook up drain rod as shown. Make sure knob clears the faucet.
5. Waste plug can be made "vandalproof" by inserting the inside end of the side rod through the eye in the bottom of the plug.
6. You are now ready to turn on water supply.

POSITION FOR EASY REMOVAL

VANDALPROOF

MT417 OCTOBER 11

© Copyright, 2011
Moen Incorporated