MOEN®

ORDER BY PART NUMBER

Trim can be used with WMV130series

Illustrated Parts

SMYTH™

One-Handle Wallmount Tub Filler Trim
WTS601 Series

ID	Kit Number	Finish
*A	221993	See below
*B	40057	See below
C	221994	Chrome
D	200764	N/A
E	210568	N/A
*F	210565	N/A
G	200775	See below
H	210563	N/A
I	1215	N/A
*J	TFS2611	See below
K	210492	See below

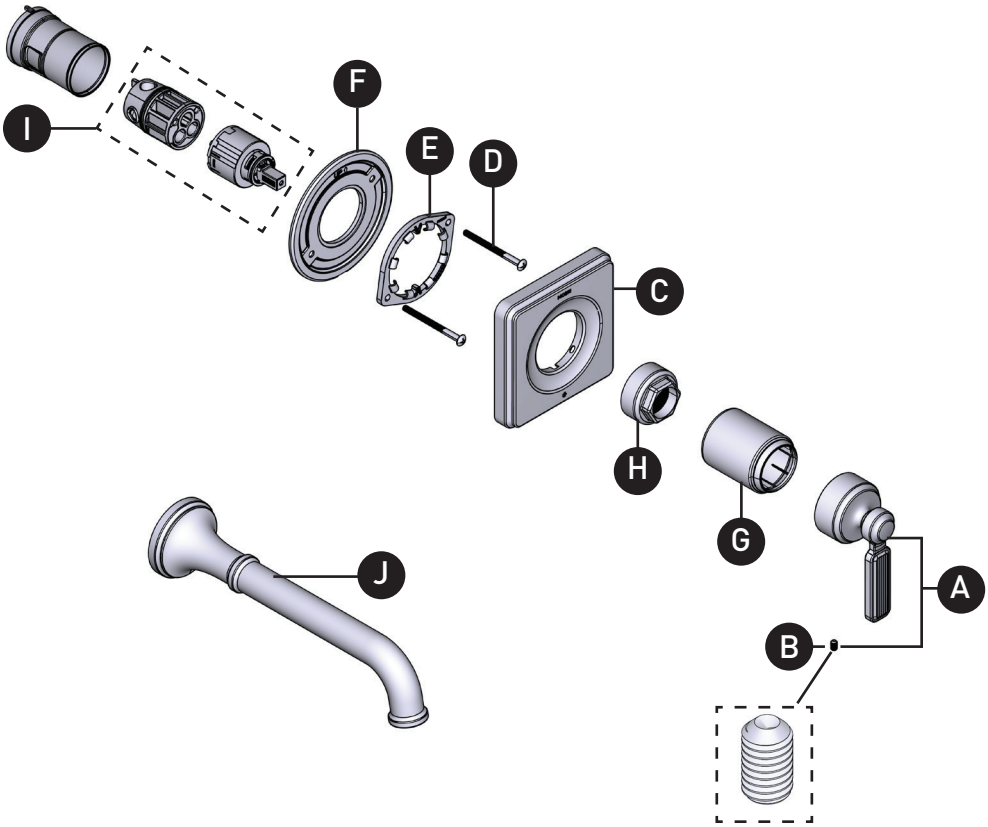

OPTIONNAL: 1" Handle Extension Kit

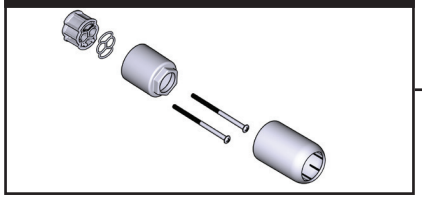

***Finish Determined by Suffix**

Finish	Description
No Suffix	Chrome
BN	Brushed Nickel
BL	Matte Black
BZG	Bronzed Gold
NL	Polished Nickel

M•PACT™ System

TO ORDER PARTS CALL: 1-800-BUY-MOEN
www.moen.com

DK11/2026 EXP7/30/6 50000736113
Released/01