MOEN®

ORDER BY PART NUMBER

Illustrated Parts

COLINET™

Single-Handle M-CORETM 2-Series Trim

UTS244201 Series - VALVE TRIM ONLY
UTS244202EP Series - SHOWER TRIM ONLY
UTS244203EP Series - TUB SHOWER TRIM

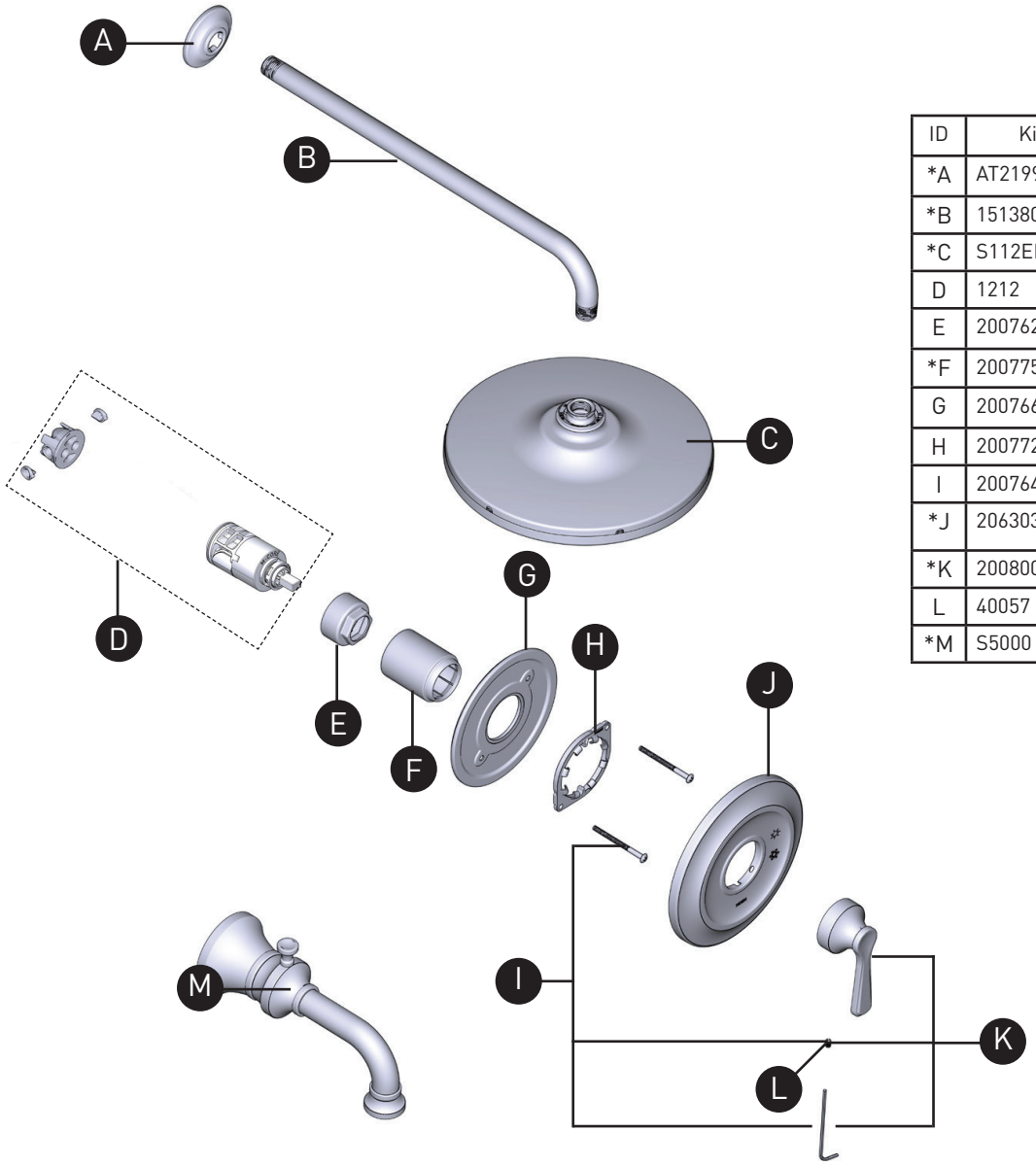

ID	Kit Number	Finish
*A	AT2199	See below
*B	151380	See below
*C	S112EP	See below
D	1212	N/A
E	200762	N/A
*F	200775	See below
G	200766	N/A
H	200772	N/A
I	200764	N/A
*J	206303	See below
*K	200800	See below
L	40057	N/A
*M	S5000	See below

OPTIONNAL: 1" Handle Extension Kit

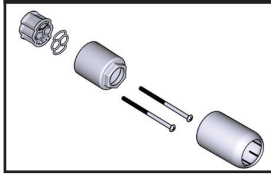

Model	Finish
200755	Chrome
200755BN	Brushed Nickel
200755BG	Brushed Gold
200755NL	Polished Nickel
200755BL	Matte Black
200755BZG	Bronzed Gold

***Finish Determined by Suffix**

Finish	Description
No Suffix	Chrome
BN	Brushed Nickel
BG	Brushed Gold
NL	Polished Nickel
BL	Matte Black
BZG	Bronzed Gold

M•PACT™ System

TO ORDER PARTS CALL: 1-800-BUY-MOEN
www.moen.com