MOEN

Buy it for looks. Buy it for life.®

Illustrated Parts

■ **Order by Part Number**

■ **Trim can be used with either the 9992, 9993, 9997, 9999 Rough in**

MONTICELLO® CATHEDRAL™ HIGH-ARC Two-Handle Roman Tub w/Built-In Diverter Valve Faucet

MODEL	TYPE	FINISH
T956	Lever	Chrome
T956CP	Lever	Chrome/Pol. Brass
T956CPC	Lever	Chrome/Porcelain
T956P	Lever	Polished Brass
Discontinued		
T956PM	Lever	Platinum
T956PMC	Lever	Platinum/Chrome
T956ST	Lever	Satine™
T956STP	Lever	Satine™/Pol. Brass

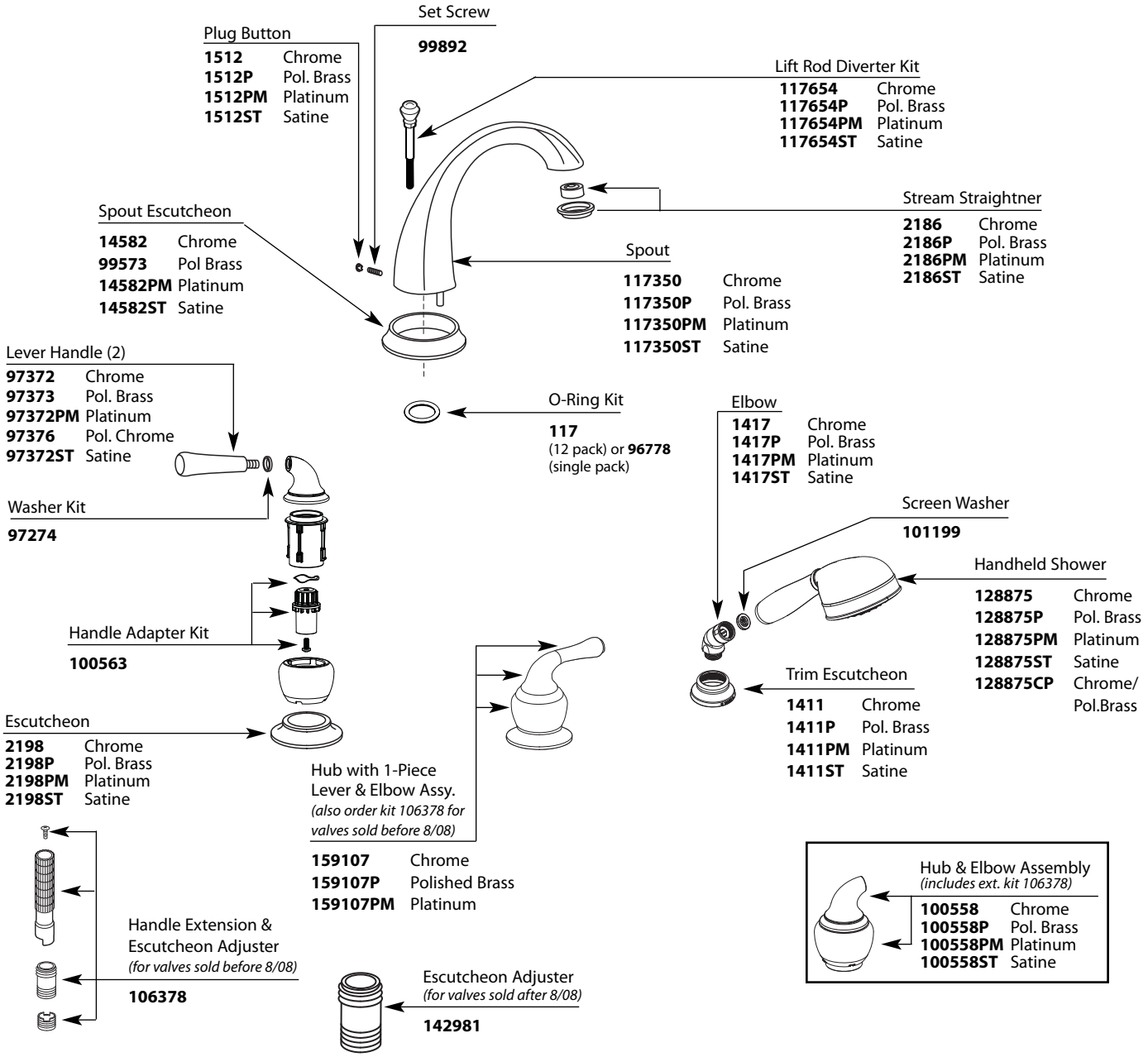

TO ORDER PARTS CALL: 1-800-BUY-MOEN

www.moen.com

Rev. 9/11

09/27/2011 EXP7139 9000001/5313
Released/04