MOEN®

ILLUSTRATED PARTS

GEORGENE™

Single-handle Pulldown Kitchen Faucet
87912 Series

ORDER BY PART NUMBER

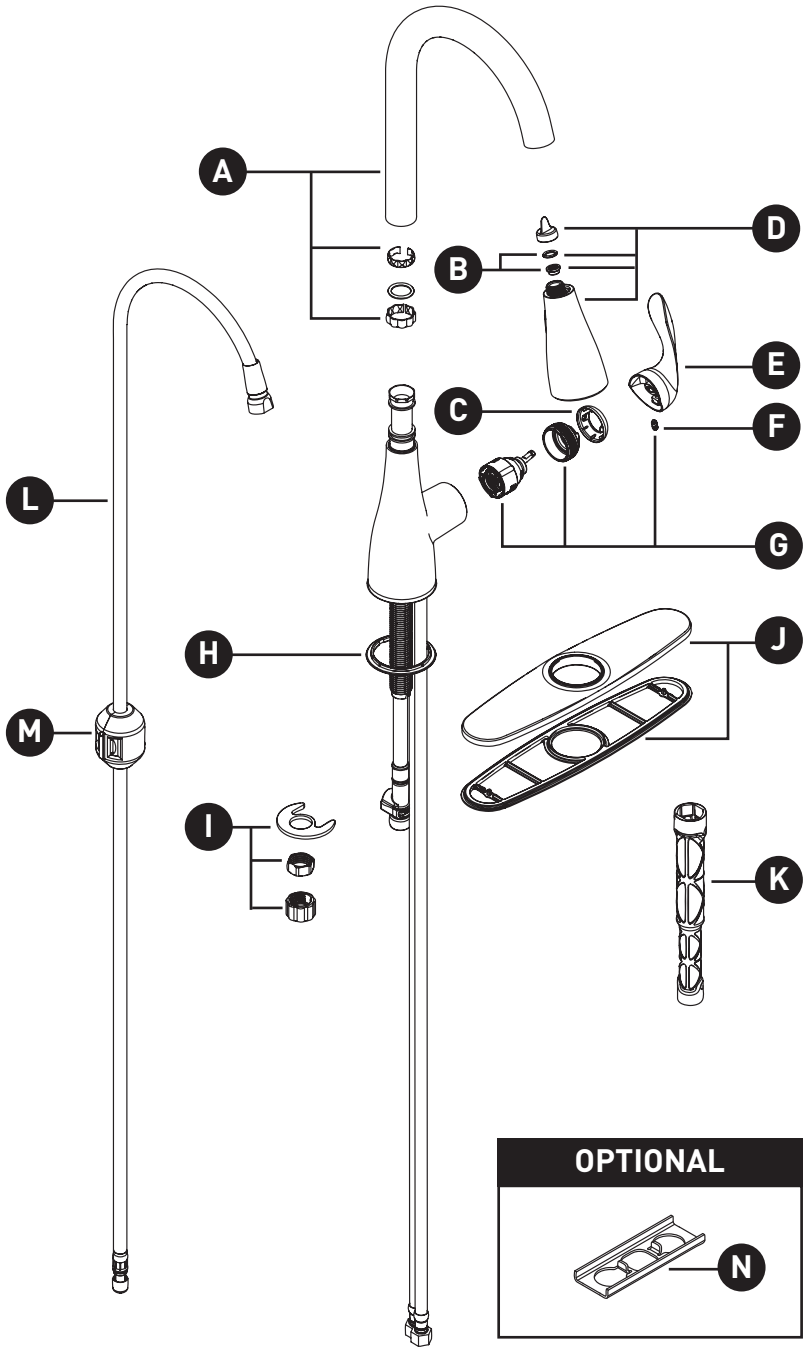

ID	Kit Number	Finish
A	174948	Chrome
	174948BL	Matte Black
	174948MSRS	(Used for Spot Resist Stainless)
B	158550	N/A
*C	160660	See below
D	161150	Chrome
	161150BL	Matte Black
	162469SRS	(Used for Spot Resist Stainless)
*E	197708	See below
F	155023	N/A
G	160657	N/A
H	143338	Chrome
	143338BL	Matte Black
I	192155	N/A
*J	141002	See below
K	118305	N/A
L	212650	N/A
M	125989	N/A
N	176787	N/A

***Finish Determined by Suffix**

Finish	Description
No Suffix	Chrome
BL	Matte Black
SRS	Spot Resist Stainless

TO ORDER PARTS CALL: 1-800-BUY-MOEN
www.moen.com