MOEN®

ORDER BY PART NUMBER

Illustrated Parts

Nolia™

Single-Handle Pulldown Kitchen Faucet

MODEL	HANDLE	FINISH
87071	Lever	Chrome
87071BL	Lever	Matte Black
87071SRS	Lever	Spot Resist Stainless
87071BZG	Lever	Bronzed Gold

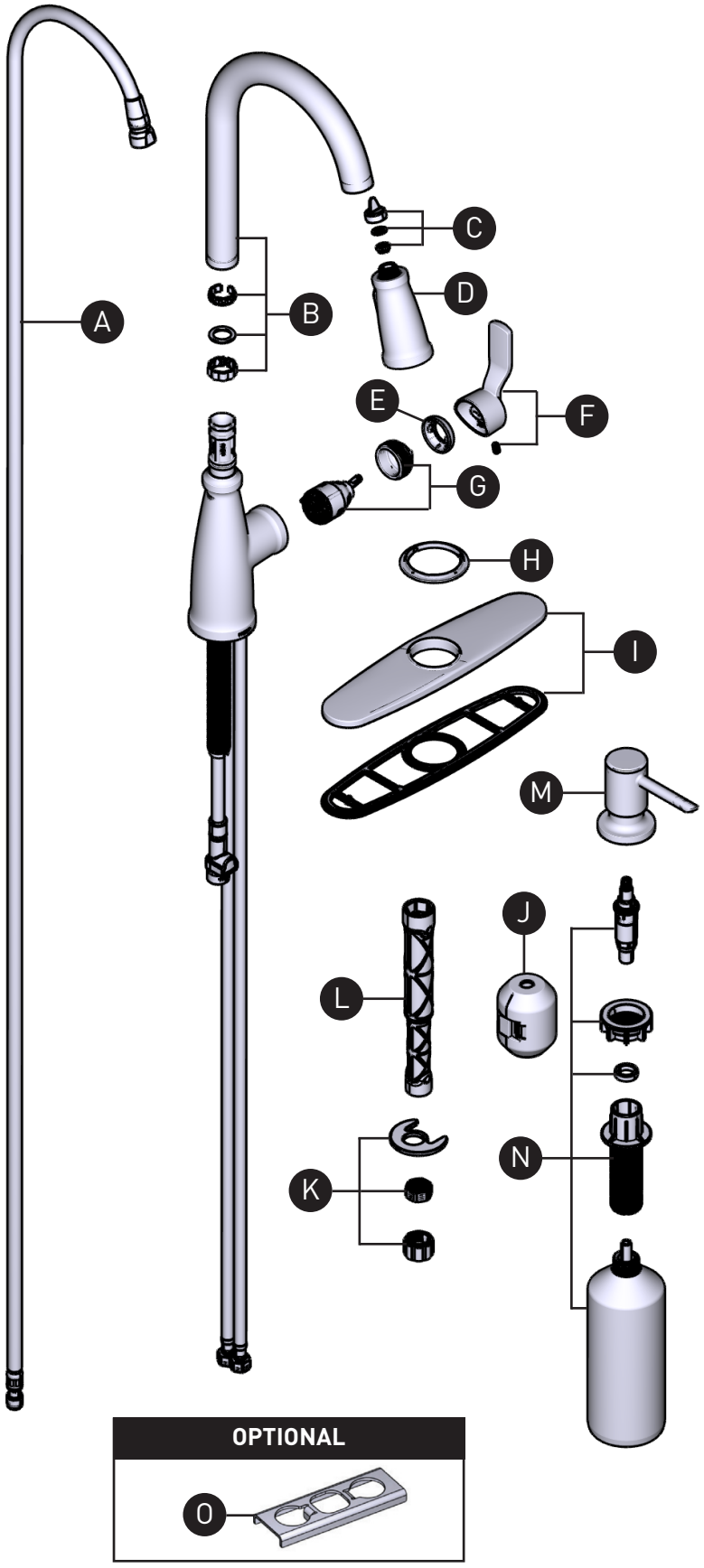

ID	Kit Number	Kit Description	Finish
A	212650	Hose Kit	N/A
B	174948	Spout Tube Kit	Chrome
	174948MSRS		Spot Resist Stainless
	174948BL		Matte Black
	174948BZG		Bronzed Gold
C	158550	O-Ring and Screen Washer Kit	N/A
D	212866	Wand Kit	Chrome
	212866SRS		Spot Resist Stainless
	212866BL		Matte Black
	212866BZG		Bronzed Gold
E	160660	Dome Kit	Chrome
	160660SRS		Spot Resist Stainless
	160660BL		Matte Black
	160660BZG		Bronzed Gold
F	212867	Handle Kit (Requires 3/32" hex key for set screw)	Chrome
	212867SRS		Spot Resist Stainless
	212867BL		Matte Black
	212867BZG		Bronzed Gold
G	160657	Replacement Cartridge, Cartridge Nut	N/A
H	143338	Deck Gasket	Chrome
	143338BL		Matte Black
I	141002	Escutcheon Kit	Chrome
	141002SRS		Spot Resist Stainless
	141002BL		Matte Black
	141002BZG		Bronzed Gold
J	125989	Weight Kit	N/A
K	113173	Mounting Hardware	N/A
L	118305	Installation Tool	N/A
M	171172	Soap Dispenser	Chrome
	171172SRS		Spot Resist Stainless
	171172BL		Matte Black
	171172BZG		Bronzed Gold
N	344113	Underdeck Kit	N/A
O	176787	Mounting Bracket	N/A