MOEN®

ORDER BY PART NUMBER

Illustrated Parts

FINDLAY™

Two Handle Centerset Lavatory Faucet

MODEL	NOTES	FINISH
84515SRN	Spring-Loaded Waste	Spot Resist Brushed Nickel
84515BL	Spring-Loaded Waste	Matte Black
84515BZG	Spring-Loaded Waste	Bronzed Gold

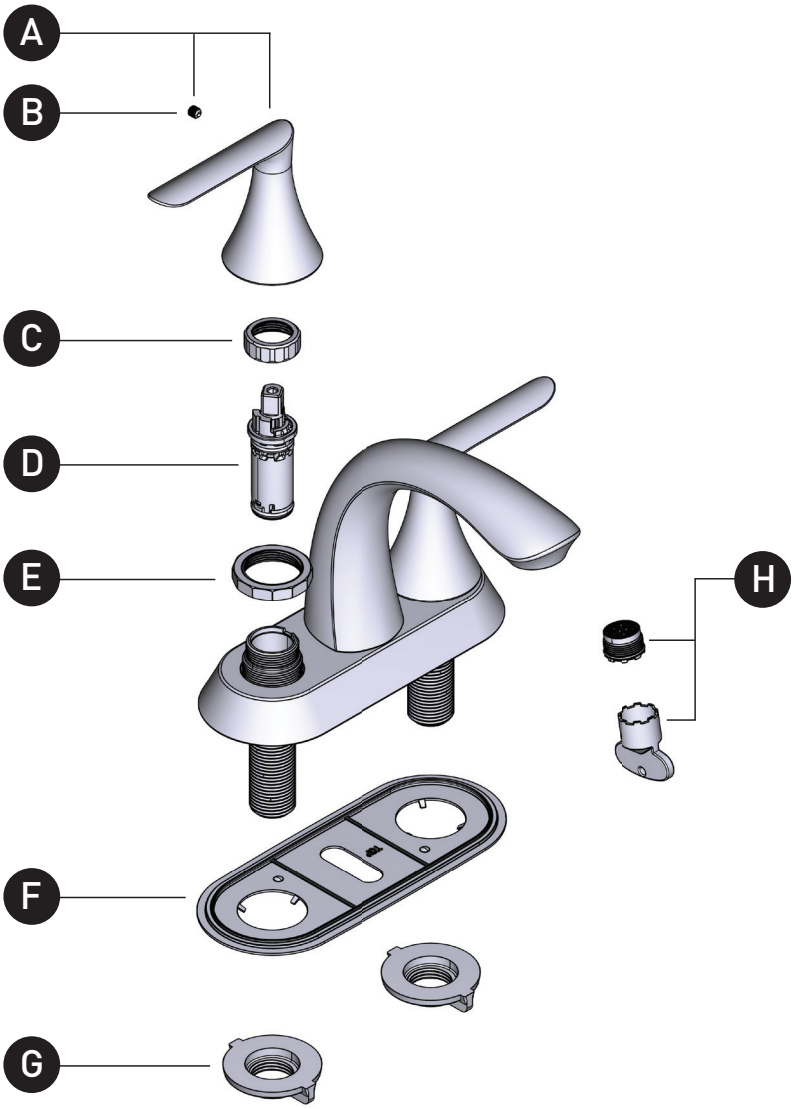

ID	Kit Description	Kit Number	Finish
A	Handle Kit - Hot	214031SRN	Spot Resist Brushed Nickel
		214031BL	Matte Black
		214031BZG	Bronzed Gold
	Handle Kit - Cold	214032SRN	Spot Resist Brushed Nickel
		214032BL	Matte Black
		214032BZG	Bronzed Gold
B	Set Screw (Requires 3/32" hex key)	159198	NA
C	Cartridge Nut (Qty 2)	97535	NA
D	Replacement Cartridge	1224	NA
E	Escutcheon Nut (Qty 2)	130560	NA
F	Deck Gasket	212617	Use for Spot Resist Brushed Nickel and Bronzed
		212617BL	Matte Black
G	Mounting Nuts (Qty 2)	145665	NA
H	Aerator Kit - 1.2gpm (Includes Tool)	180158	NA
I	Spring-Loaded Waste - Full Assembly	186478CSL	Spot Resist Brushed Nickel
		186478BL	Matte Black
		186478BZG	Bronzed Gold
J	Thin Deck Spacer Kit (Qty 2)	146936	NA
K	Thick Deck Extension Kit (Qty 2)	100818	NA
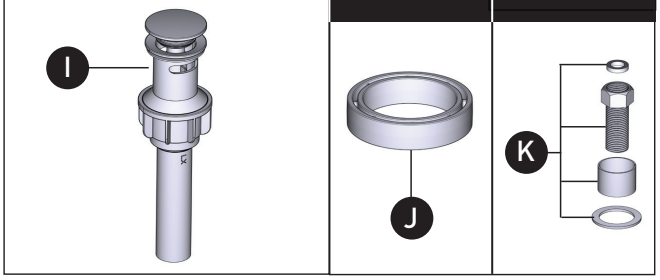
WASTE ASSEMBLIES	USE ON DECKS < 1/4" (6mm)	USE ON DECKS > 1-3/16" (30mm)
For Waste Service Order Full Assembly