MOEN®

Illustrated Parts

90 DEGREE™
M-CORE™ 3-Series Trim

Valve Trim Only	Shower Trim Only	Tub Shower Trim	Finish
UTS3711	UTS3715	UTS3713	Chrome
UTS3711BN	UTS3715BN	UTS3713BN	Brushed Nickel
UTS3711BL	UTS3715BL	UTS3713BL	Matte Black
	UTS3715EP	UTS3713EP	Chrome
	UTS3715EPBN	UTS3713EPBN	Brushed Nickel
	UTS3715EPBL	UTS3713EPBL	Matte Black

EP =1.75gpm head

- **Order by Part Number**
- **Trim can be used with U130 series or U140 series valve**

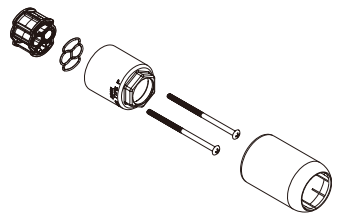

Optional 1" Handle Extension Kit

Model	Finish
200780	Chrome
200780BN	Brushed Nickel
200780BL	Matte Black

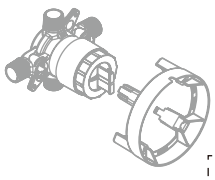

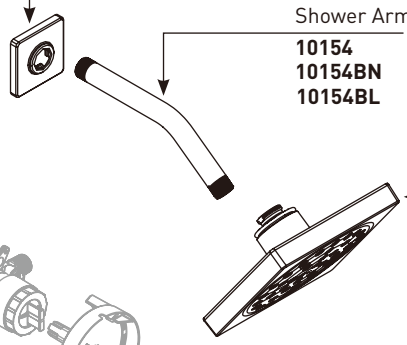

Shower Arm Flange

147572	Chrome
147572BN	Brushed Nickel
147572BL	Matte Black

Shower Arm

10154	Chrome
10154BN	Brushed Nickel
10154BL	Matte Black

Shower Head 2.5 GPM

S6340	Chrome
S6340BN	Brushed Nickel
S6340BL	Matte Black

Shower Head 1.75 GPM

S6340EP	Chrome
S6340EPBN	Brushed Nickel
S6340EPBL	Matte Black

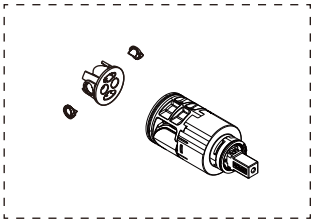

Cartridge Assembly
1213

Sleeve

200777	Chrome
200777BN	Brushed Nickel
200777BL	Matte Black

Cartridge Nut
207669

Snap Ring
200773

Escutcheon Kit

200799	Chrome
200799BN	Brushed Nickel
200799BL	Matte Black

Backing Plate
200767

Handle Hub Kit

200821	Chrome
200821BN	Brushed Nickel
200821BL	Matte Black

Backing Plate Screws (X2)
200764

Handle Kit

200798	Chrome
200798BN	Brushed Nickel
200798BL	Matte Black

Set Screw (Requires 3/32" Hex Key)
40057

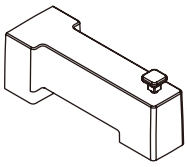

Tub Spout

S3896	Chrome
S3896BN	Brushed Nickel
S3896BL	Matte Black

M•PACT™ System

TO ORDER PARTS CALL: 1-800-BUY-MOEN
www.moen.com