MOEN®

Illustrated Parts

■ **Order by Part Number**

HALLE™ POSI-TEMP®

Single-Handle Tub/Shower
82970 Series - Tub Shower
82971 Series - Shower only

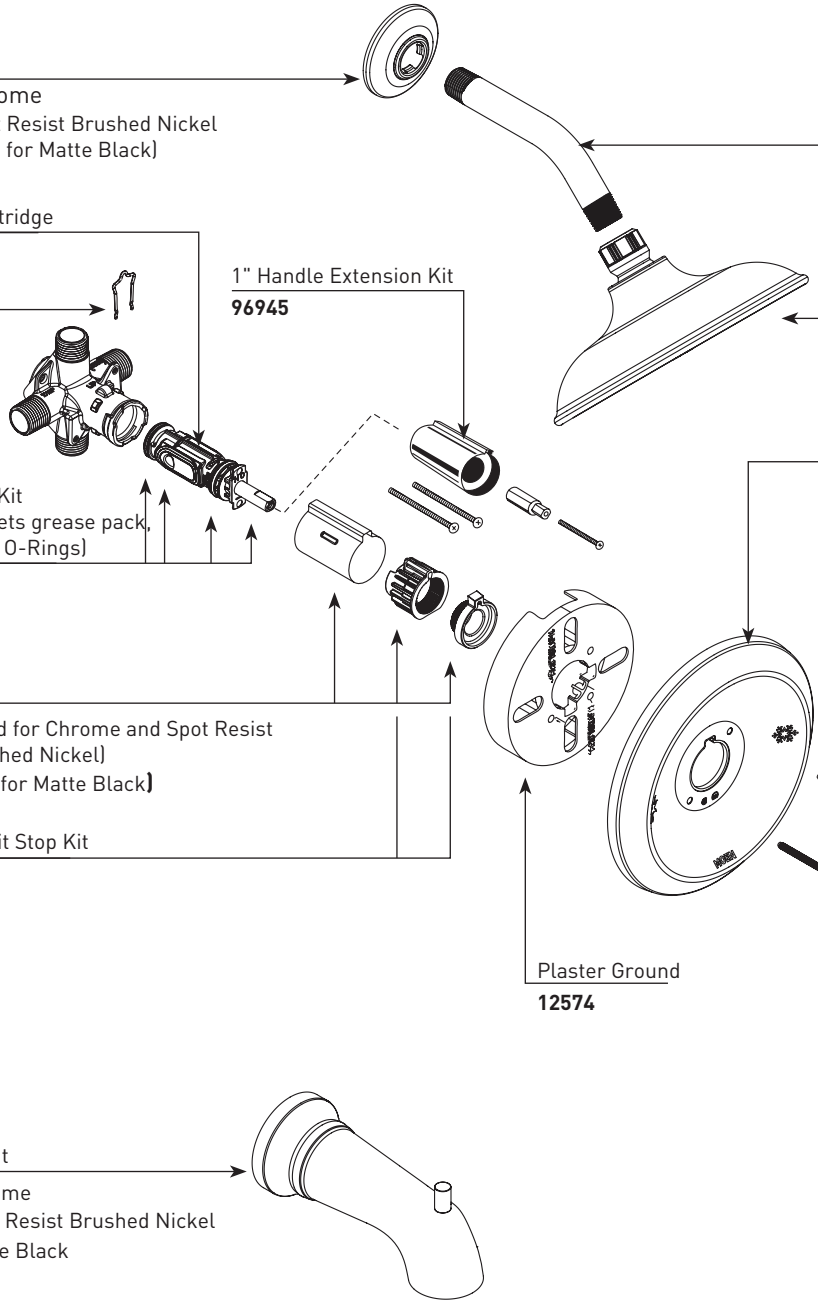

Shower Flange
AT2199 Chrome
AT2199SRN Spot Resist Brushed Nickel
AT2199WR (Use for Matte Black)

Shower Arm
10154 Chrome
10154SRN Spot Resist Brushed Nickel
10154WR (Use for Matte Black)

Replacement Cartridge
1222

Retainer Clip
96914

1" Handle Extension Kit
96945

Showerhead
156815 Chrome
156815SRN Spot Resist Brushed Nickel
156815BL Matte Black

Escutcheon
186695 Chrome
186695SRN Spot Resist Brushed Nickel
186695BL Matte Black

Cartridge Repair Kit
(Contains grommets grease pack, and all necessary O-Rings)
96988

Escutcheon Screws
15528 Chrome
163BN (Use for Spot Resist Brushed Nickel)
163WR (Use for Matte Black)

Stop Tube Kit
96987 (Used for Chrome and Spot Resist Brushed Nickel)
96987WR (Use for Matte Black)

Handle Adapter Kit
(Includes 7/64" Hex Key)
116653

Temperature Limit Stop Kit
106479

Plaster Ground
12574

Diverter Tub Spout
195398 Chrome
195398SRN Spot Resist Brushed Nickel
195398BL Matte Black

Handle Kit
195399 Chrome
195399SRN Spot Resist Brushed Nickel
195399BL Matte Black

01/14/2026 EXP:23/07 90000726572
Released/01