MOEN®

ILLUSTRATED PARTS

ORDER BY PART NUMBER

NOTE: Trim can be used with either the 9000 or 69000 valves

Gibson™
Two-Handle Widespread Lavatory Faucet

MODEL	HANDLE	FINISH
T6142	Lever	Chrome
T6142BN	Lever	Brushed Nickel
T6142BL	Lever	Matte Black

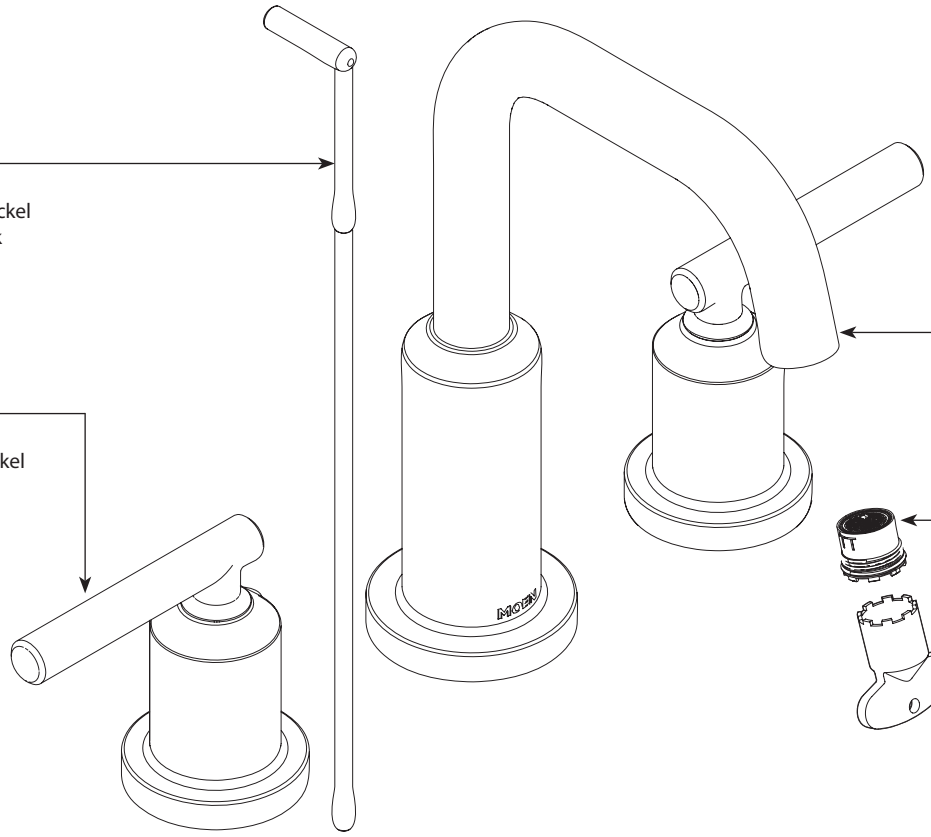

Lift Rod

123804	Chrome
123804BN	Brushed Nickel
123804BL	Matte Black

Handle Kit

165193	Chrome
165193BN	Brushed Nickel
165193BL	Matte Black

Spout Kit

184085	Chrome
184085BN	Brushed Nickel
184085BL	Matte Black

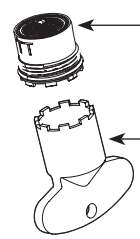

Aerator Kit
(Includes Tool)

181085	1.2gpm
184082	1.0gpm

Installation Tool

125796

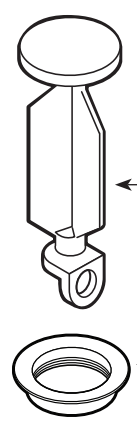

Pop-Up Plug & Seat

10709	Chrome
10709BN	Brushed Nickel
10709WR	Wrought Iron (Used for Matte Black)

OPTIONAL

Red & Blue Temp. Ind. Rings

184084

M•pact System

04/24

TO ORDER PARTS CALL: 1-800-BUY-MOEN
www.moen.com

08/23/2024 EXP12351 5000069630
Released 02