MOEN®

ILLUSTRATED PARTS

MUIRFIELD®
Single Handle Lever Cathedral Kitchen Faucet w/Side Spray

MODEL	HANDLE	FINISH
CA87002CSL	Lever	Classic Stainless
CA87002BRB	Lever	Mediterranean Bronze
CA87002SRS	Lever	Spot Resistant Stainless

ORDER BY PART NUMBER

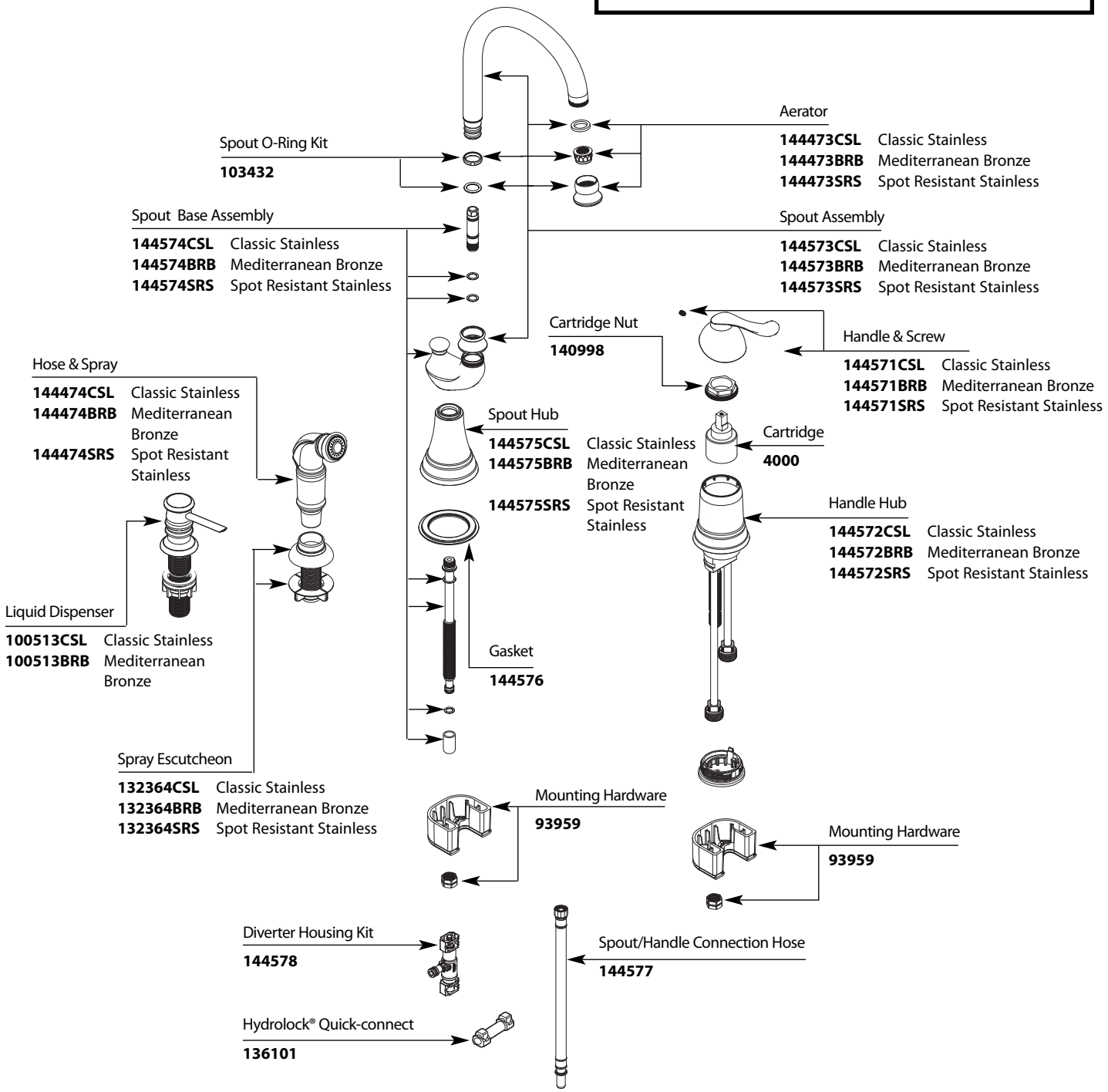

TO ORDER PARTS CALL: 1-800-BUY-MOEN
www.moen.com