MOEN

Buy it for looks. Buy it for life.®

Illustrated Parts

BANBURY™
Single-Handle High-Arc Pullout Kitchen Faucet

MODEL	TYPE	FINISH
CA87010	Lever	Chrome
CA87010CSL	Lever	Classic Stainless
CA87010W	Lever	Glacier
CA87010BL	Lever	Matte Black
CA87010V	Lever	Ivory
CA87010SRS	Lever	Spot Resistant Stainless

■ **Order by Part Number**

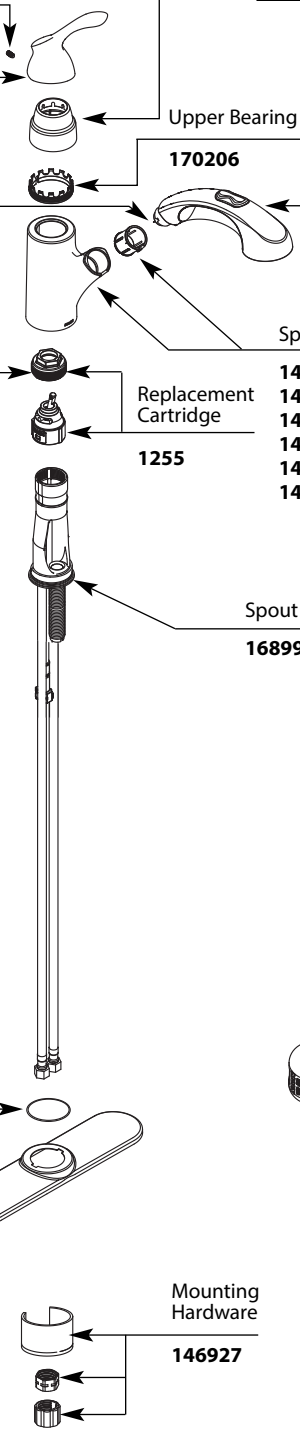

Dome

146211	Chrome
146211CSL	Classic Stainless
146211W	Glacier
146211BL	Matte Black
146211V	Ivory
146211SRS	Spot Resistant Stainless

Set Screw

155023

Handle Kit

148625	Chrome
148625CSL	Classic Stainless
148625W	Glacier
148625BL	Matte Black
148625V	Ivory
148625SRS	Spot Resistant Stainless

Upper Bearing Kit

170206

O-Ring & Screen Washer Kit

158550 1.5

Pull-Out Wand (2.2gpm)

149509CSL	Classic Stainless
149509BL	Matte Black

Pull-Out Wand (1.5gpm)

162468	Chrome
162468W	Glacier
162468V	Ivory
162468SRS	Spot Resistant Stainless

Cartridge Nut

Note: Must change nut with cartridge

144266

Replacement Cartridge

1255

Spout Receptor Kit

146862	Chrome
146862CSL	Classic Stainless
146862W	Glacier
146862BL	Matte Black
146862V	Ivory
146862SRS	Spot Resistant Stainless

QUICK CONNECTION PRIOR TO 12/2009

Hose Adapter

136101

Spout O-Ring

168994

2-PIECE ESCUTCHEON PRIOR TO 1/2011

2-Piece Escutcheon

123244	Chrome
123244CSL	Classic Stainless
123244W	Glacier
123244BL	Matte Black
123244V	Ivory
123244SRS	Spot Resistant Stainless

HOSE ADAPTER CLIP

Clip

152767

Hose Service Kit

131381

Hose Weight

150260

O-ring

146213

Escutcheon & Gasket Kit

157283	Chrome
157283W	Glacier
157283BL	Matte Black
157283V	Ivory
157283SRS	Spot Resistant Stainless

Mounting Hardware

146927

Installation Tool

118305

11/10/2015 EXP:(1/29) 5000021450
Released 15