MOEN®

ORDER BY PART NUMBER

Illustrated Parts

Cadia™ MotionSense Wave™

Hands-Free, Single-Handle High arc Pulldown Kitchen Faucet

MODEL **FINISH**
87869EWSRS SPOT RESIST STAINLESS

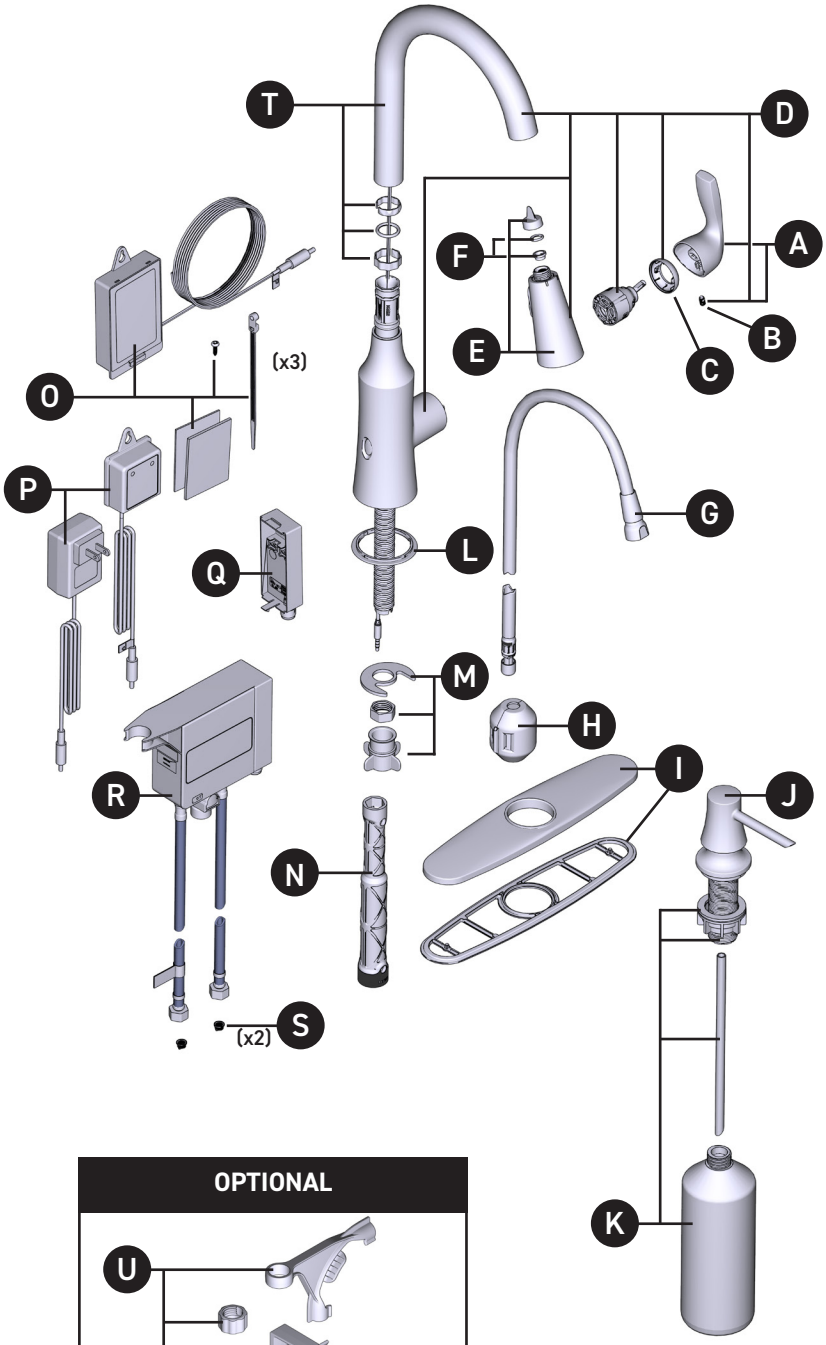

OPTIONAL

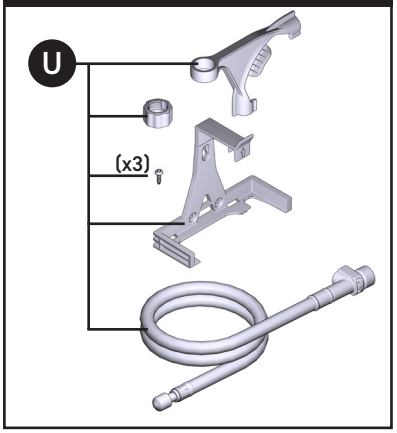

ID	Kit Description	Kit Number	Finish
A	Handle Kit	206875SRS	Spot Resist Stainless
B	Handle Kit Set Screw *(Requires 3/32" Hex Key)*	155023	N/A
C	Handle Dome	160660SRS	Spot Resist Stainless
D	Faucet Assembly Kit	206877SRS	Spot Resist Stainless
E	Wand Kit	187728SRS	Spot Resist Stainless
F	Wand Screen and O-ring Kit	158550	N/A
G	Hose Kit	150259	N/A
H	Weight Kit	125989	N/A
I	Escutcheon & Gasket Kit	141002SRS	Spot Resist Stainless
J	Soap Dispenser	196229SRS	Spot Resist Stainless
K	Underdeck kit	344113	N/A
L	Deck Gasket Kit	143338	N/A
M	Mounting Hardware	193774	N/A
N	Installation Tool	118305	N/A
O	Battery Holder & Hardware Pack *(6AA Batteries Not Included)*	177567	N/A
P	AC Adapter with Power Splitter *(Sold seperately)*	169031	N/A
Q	Wave Electronics Box Only	188031	N/A
R	Control Box Only *(Includes (x2) Supply Hose Assemblies)*	177569	N/A
S	Filter Screen (x2)	197171	N/A
T	Spout Kit	176078SRS	Spot Resist Stainless
U	Wall Mount Service Kit	177566	N/A