MOEN®

Illustrated Parts

■ **Order by Part Number**

Ayda™
Two Handle Centerset Lavatory Faucet

MODEL	FINISH	NOTES
84728SRN	Spot Resist Brushed Nickel	Non-Metallic Waste

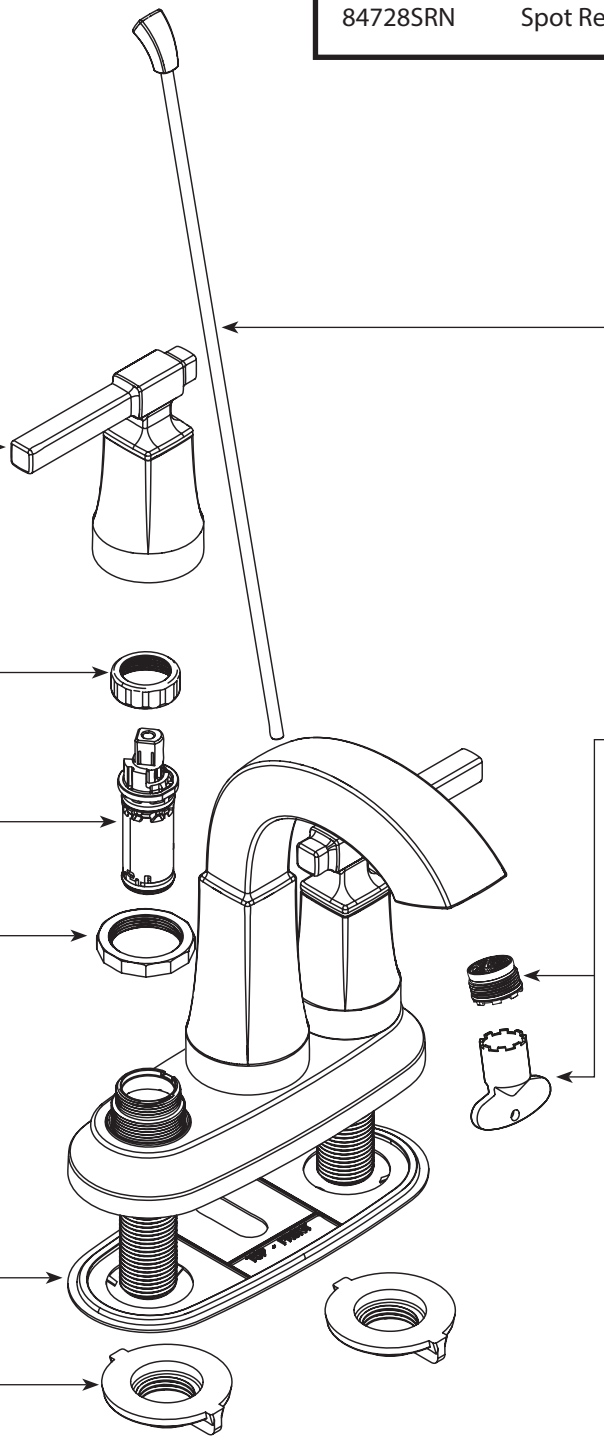

Lift Rod Kit
171360SRN Spot Resist Brushed Nickel

Handle Kit - Hot
193396SRN Spot Resist Brushed Nickel

Handle Kit - Cold
193397SRN Spot Resist Brushed Nickel

Cartridge Nut (Qty 2)
97535

Replacement Cartridge
1224

Escutcheon Nut (Qty 2)
130560

Gasket Kit
171361

Mounting Nuts (Qty 2)
145665

Aerator Kit *(Includes Tool)*
180158 1.2gpm

WASTE ASSEMBLIES

For Waste Service Order Full Assembly

Non-Metallic Waste Assembly
151018CSL Classic Stainless *(Use for Spot Resist Brushed Nickel)*

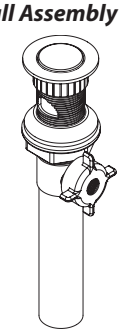

USE ON DECKS < 1/4" (6mm)	USE ON DECKS >1-3/16" (30mm)
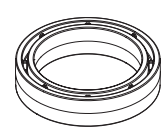 Thin Deck Spacer Kit (Qty 2) **146936**	Thick Deck Extension Kit (Qty 2) **100818**

TO ORDER PARTS CALL: 1-800-BUY-MOEN
www.moen.com

04/10/2022 EXP.2216 5000063623
Released 00