MOEN®

Illustrated Parts

BELHURST™
Two Handle Lavatory Faucet

MODEL	TYPE	FINISH
84340	Lever	Chrome
84340SRN	Lever	Spot Resist Brushed Nickel

■ **Order by Part Number**

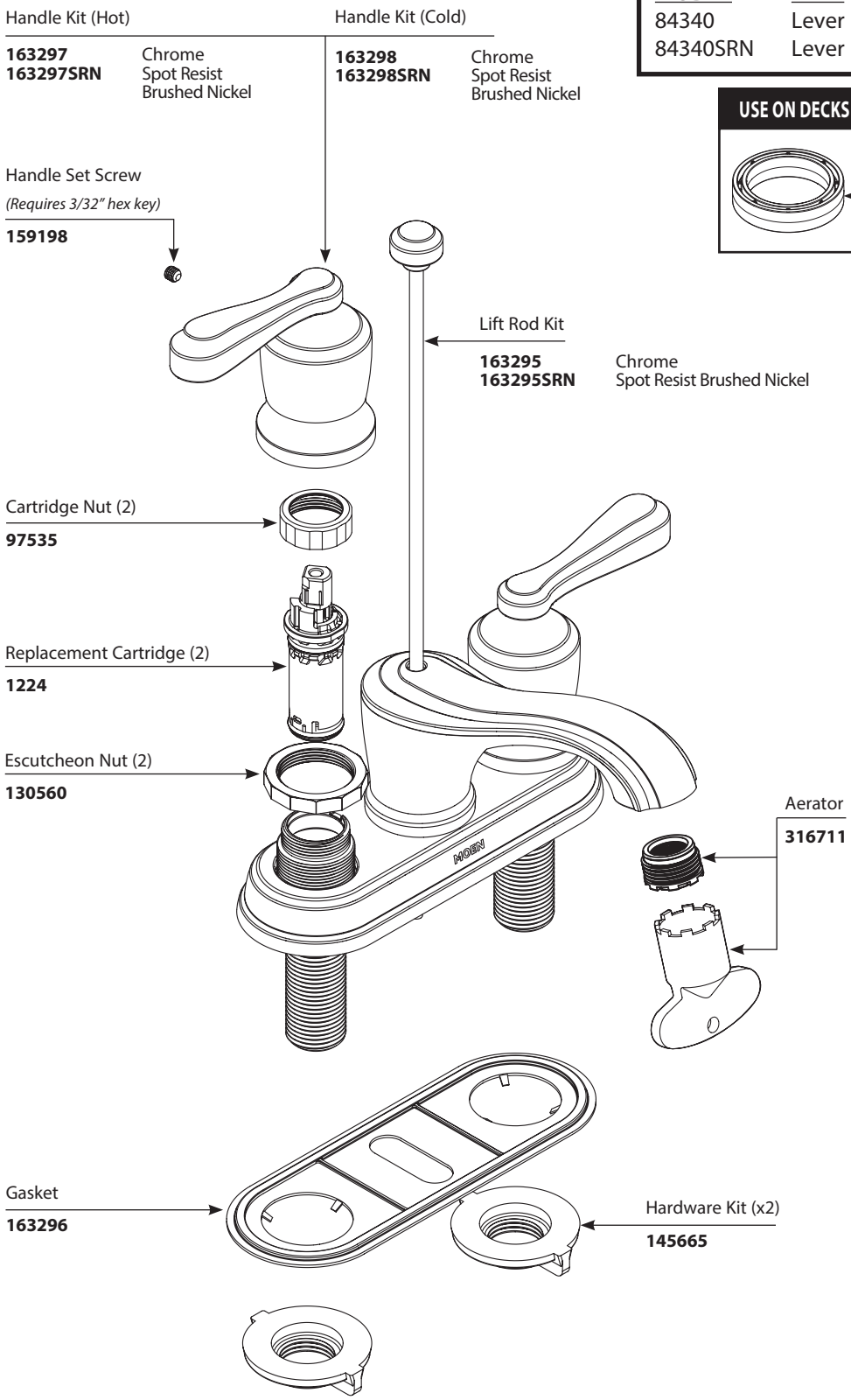

USE ON DECKS < 1/4" (6mm)

Thin Deck Spacer Kit
146936

USE ON DECKS > 1-1/8" (29mm)

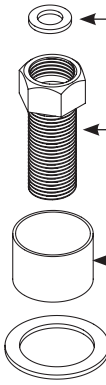

Deck Extension Kit
100818

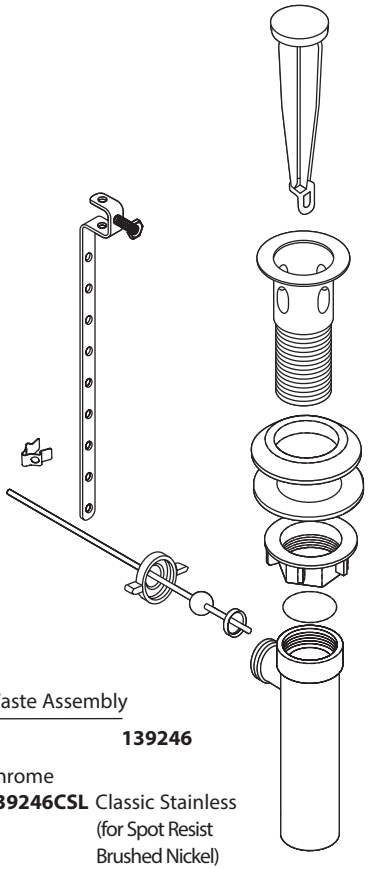

Waste Assembly
139246

Chrome
139246CSL Classic Stainless (for Spot Resist Brushed Nickel)

TO ORDER PARTS CALL: 1-800-BUY-MOEN

01/09/2019 EX2P71.1460 5900002450G07
Belhurst/12