MOEN®

Illustrated Parts

■ **Order by Part Number**

KOREK™ POSI-TEMP®
Single-Handle Tub/Shower

Model	Type	Finish
82466	Lever	Chrome
82466SRN	Lever	Spot Resist Brushed Nickel
82466BL	Lever	Matte Black

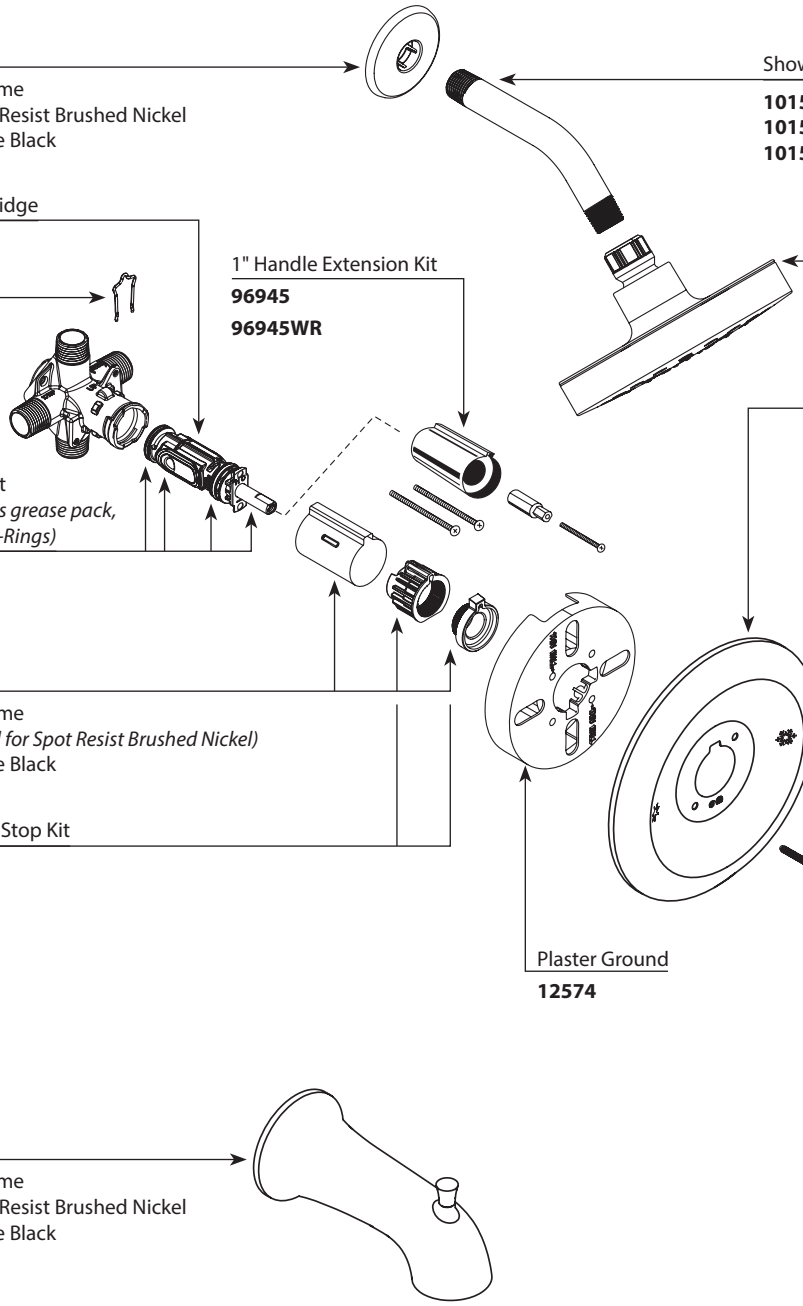

TO ORDER PARTS CALL: 1-800-BUY-MOEN
www.moen.com

01/29/2021 EXP-7546 S00004459016
Released 01