# MOEN®

# *Illustrated Parts*

## COLINET™
### M-CORE™ 3-Series Trim

| Valve Trim Only | Shower Trim Only | Tub Shower Trim | Finish |
|---|---|---|---|
| UTS344301 | UTS344302 | UTS344303 | Chrome |
| UTS344301BG | UTS344302BG | UTS344303BG | Brushed Gold |
| UTS344301BN | UTS344302BN | UTS344303BN | Brushed Nickel |
| UTS344301BL | UTS344302BL | UTS344303BL | Matte Black |
| | UTS344302EP | UTS344303EP | Chrome |
| | UTS344302EPBG | UTS344303EPBG | Brushed Gold |
| | UTS344302EPBN | UTS344303EPBN | Brushed Nickel |
| | UTS344302EPBL | UTS344303EPBL | Matte Black |

EP =1.75gpm head

- **Order by Part Number**
- **Trim can be used with U130 series or U140 series valve**

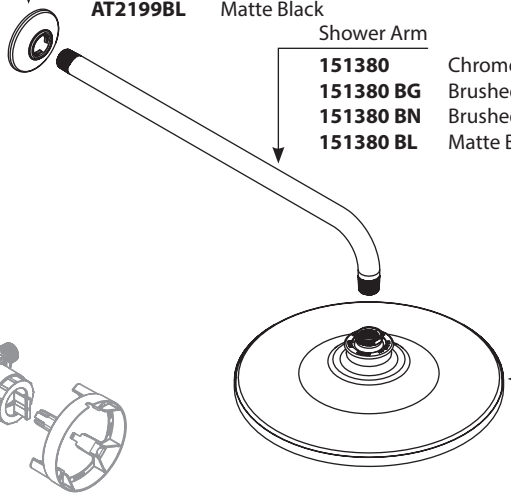

Shower Arm Flange

| | |
|---|---|
| **AT2199** | Chrome |
| **AT2199BG** | Brushed Gold |
| **AT2199BN** | Brushed Nickel |
| **AT2199BL** | Matte Black |

Shower Arm

| | |
|---|---|
| **151380** | Chrome |
| **151380 BG** | Brushed Gold |
| **151380 BN** | Brushed Nickel |
| **151380 BL** | Matte Black |

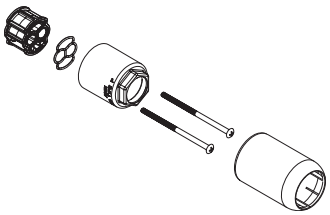

Optional 1" Handle Extension Kit

| Model | Finish |
|---|---|
| 200755 | Chrome |
| 200755BG | Brushed Gold |
| 200755BN | Brushed Nickel |
| 200755BL | Matte Black |

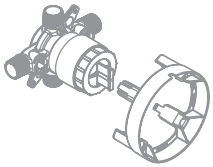

Shower Head 2.5 GPM

| | |
|---|---|
| **S112** | Chrome |
| **S112BG** | Brushed Gold |
| **S112BN** | Brushed Nickel |
| **S112BL** | Matte Black |

Shower Head 1.75 GPM

| | |
|---|---|
| **S112EP** | Chrome |
| **S112EPBG** | Brushed Gold |
| **S112EPBN** | Brushed Nickel |
| **S112EPBL** | Matte Black |

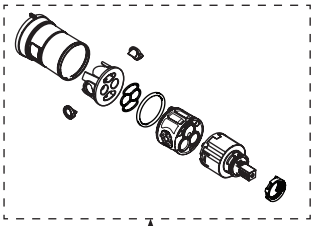

Sleeve

| | |
|---|---|
| **200775** | Chrome |
| **200775BG** | Brushed Gold |
| **200775BN** | Brushed Nickel |
| **200775BL** | Matte Black |

Cartridge Assembly
**1213**

Cartridge Nut
**200762**

Snap Ring
**200772**

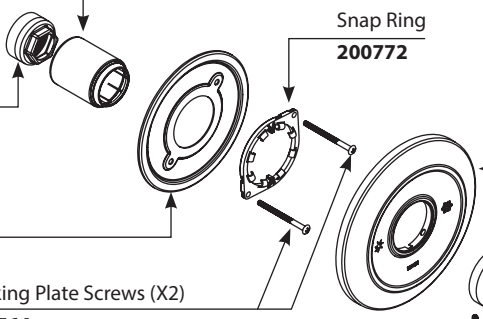

Escutcheon Kit

| | |
|---|---|
| **200801** | Chrome |
| **200801BG** | Brushed Gold |
| **200801BN** | Brushed Nickel |
| **200801BL** | Matte Black |

Backing Plate
**200766**

Backing Plate Screws (X2)
**200764**

Handle Kit

| | |
|---|---|
| **200800** | Chrome |
| **200800BG** | Brushed Gold |
| **200800BN** | Brushed Nickel |
| **200800BL** | Matte Black |

Set Screw *(Requires 3/32" Hex Key)*
**40057**

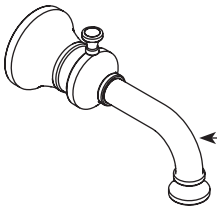

Tub Spout

| | |
|---|---|
| **S5000** | Chrome |
| **S5000BG** | Brushed Gold |
| **S5000BN** | Brushed Nickel |
| **S5000BL** | Matte Black |

**M•PACT™ System**



**TO ORDER PARTS CALL: 1-800-BUY-MOEN**
**www.moen.com**

05/10/2021 EXP72419 500000462537
Release014